# Construction Standards
# (CCX-STND-70-001)

*For DISH Network L.L.C. Representative Use Only*


This document contains DISH confidential, proprietary information. This document may be disclosed to only the appropriate customer personnel, who may review this document for the sole purpose of approving or disapproving it, unless the customer obtains DISH's prior written consent for each instance.


**Release: Q4/2022**

**Notes**

1. The revision summary table has been removed from the first page of this Construction Standards document. It is included within this document in further detail in the STANDARDS REVISION SUMMARY section.
2. This document must be copied and archived prior to updates and/or changes being made. Consult with the construction quality team, who manage this document, prior to any changes being made.




**This document is confidential and privileged to DISH. It is intended solely for use by DISH internal employees and DISH's approved vendors. Any other access or review of this document is prohibited. Any disclosure, copying or distribution, other than to DISH employees, is prohibited without DISH's consent in each instance. Hard copies of this document are not controlled and may not be current. Verify that the hard copy of this document is the most current by matching the revision and revision date to the master located in document storage.**

# ACCESS TO AUTHORIZED DOCUMENT and DISTRIBUTION

**This is a controlled document. Outdated copies must be destroyed to prevent erroneous use of obsolete information and compromised security of confidential material. Do not email this file.**

# CHANGES and UPDATES SUMMARY

Recent changes and updates to parts and documentation are listed in the table below. All quarterly changes will be summarized below.

| Category | Change Date | Change Summary |
|---|---|---|
| Part | | Tin plated 6 inch platform ground bar to replace 12 inch copper. |
| Part | 10/17/22 | Battery Caution Sticker |
| Part | | Heat Exchanger (HEX) to Air-conditioning (AC) environmental unit upgrade on cabinets in higher risk areas. |
| Document | 09/24/2022 | Samsung FDD RU Installation Procedure |
| Document | 09/29/2022 | Great Lakes Cabinet Top Sealing Washers Quality Check |
| Document | 10/12/2022 | Polarium IP44 Overlay Replacement Work Instruction MOP |
| Document | 10/04/2022 | Dell XR11 Battery/Fan Alarms MOP |
| Document | 07/27/2022 | CSR/DU Pre-wiring Notification |
| Document | 08/02/2022 | Ordering of Approved Parts in N1 Notification |
| Document | 10/26/2022 | Polarium Battery Installation Requirements |
| Document | 9/20/2022 | Battery Audit Initiative Procedure (date is for form inspection date) |
| Document | 10/24/2022 | Site Corrective Actions - Polarium Batteries Q4 Quality MOP |
| Document | 08/15/2022 | DU Edge Server Installation MOP (date is for document update) |




**This document is confidential and privileged to DISH. It is intended solely for use by DISH internal employees and DISH's approved vendors. Any other access or review of this document is prohibited. Any disclosure, copying or distribution, other than to DISH employees, is prohibited without DISH's consent in each instance. Hard copies of this document are not controlled and may not be current. Verify that the hard copy of this document is the most current by matching the revision and revision date to the master located in document storage.**

| | | |
|---|---|---|
| Document | 08/12/2022 | HVAC/HEX Self Test MOP |
| Document | 08/08/2022 | Prepping Sites for ZTP Provisioning MOP |
| Document | 09/08/2022 | Battery Removal MOP (date is for the addition of Polarium RMA) |
| Document | 10/17/2022 | Approved Alternate Conductor Material (date is for updated conditions) |




**This document is confidential and privileged to DISH. It is intended solely for use by DISH internal employees and DISH's approved vendors. Any other access or review of this document is prohibited. Any disclosure, copying or distribution, other than to DISH employees, is prohibited without DISH's consent in each instance. Hard copies of this document are not controlled and may not be current. Verify that the hard copy of this document is the most current by matching the revision and revision date to the master located in document storage.**

# STANDARDS REVISION SUMMARY

The table below details the revision changes made to the content of this Constructions Standards document only and not updates or revision changes to individual procedures linking to or branching off from this document. Revision updates for procedures are noted in the Revision Summary of each document on the cover page.

| Section Number(s) | Section Page(s) | Details of Update(s) |
|---|---|---|
| | | |
| | | |
| | | |
| | | |
| | | |
| | | |
| | | |
| | | |
| | | |
| | | |
| | | |
| | | |
| | | |
| | | |
| | | |
| | | |
| | | |
| | | |




**This document is confidential and privileged to DISH. It is intended solely for use by DISH internal employees and DISH's approved vendors. Any other access or review of this document is prohibited. Any disclosure, copying or distribution, other than to DISH employees, is prohibited without DISH's consent in each instance. Hard copies of this document are not controlled and may not be current. Verify that the hard copy of this document is the most current by matching the revision and revision date to the master located in document storage.**

# TABLES OF CONTENTS


**ACCESS TO AUTHORIZED DOCUMENT and DISTRIBUTION** 2

**CHANGES and UPDATES SUMMARY** 2

**STANDARDS REVISION SUMMARY** 4

**REFERENCE DOCUMENTS and NAMING CONVENTION** 9

**1. PURPOSE** 12

**2. REFERENCE DOCUMENTS** 12

**3. SAFETY and COMPLIANCE REQUIREMENTS** 12

3.1. PERSONAL and PROPERTY PROTECTION 12

3.2. ENVIRONMENTAL 13

3.2.1. ACT Regulations 13

**4. ACRONYMS** 14

**5. GENERAL** 14

5.1. GENERAL STANDARDS 14

5.1.1. DOCUMENT LINKS 14

5.1.2. MATERIALS 14

5.1.3. CONCRETE 14

5.1.4. PADS 15

5.1.5. COMPOUND ENCLOSURE 15

5.1.6. ELECTRICAL/TELCO 15

5.1.7. TOWER MOUNTED EQUIPMENT 16

5.1.8. COAX and FIBER ROUTING (THROUGH COMPOUND or LEASE AREA) 17

**6. CIVIL** 23

6.1. H-Frame 24

6.1.1. Location on Platform 24

6.1.2. Commscope Modular Platform Clip Position 26

6.1.3. PPC and Telco Cabinet Mounting 27

6.1.4. PPC and Telco Cabinet Orientation 28

6.2. Equipment Grounding 29

6.2.1. Ground Installation. 29

6.2.2. Caulking 30

6.2.3. Great Lakes/Charles Cabinet Cable/Conduit Penetration 30





**This document is confidential and privileged to DISH. It is intended solely for use by DISH internal employees and DISH's approved vendors. Any other access or review of this document is prohibited. Any disclosure, copying or distribution, other than to DISH employees, is prohibited without DISH's consent in each instance. Hard copies of this document are not controlled and may not be current. Verify that the hard copy of this document is the most current by matching the revision and revision date to the master located in document storage.**

6.2.4. PPC and Telco Conduit 33
6.3. Rectifier 37
6.3.1. Rectifier Positioning 37
6.3.2. Rectifier Shelf AC Wiring 37
6.4. AC Power 38
6.4.1. AC Power routing. 38
6.5. Telco Box Circuit and Wire Size 39
6.5.1. Circuit Breaker and Cabling 39
6.6. Meters 40
6.6.1. Markings & Disconnect 40
6.7. Test Well 41
6.7.1. Test Well Requirements 41

**7. CABINET 42**
7.1. CSR to SuperMicro 42
7.1.1. CSR to SuperMicro 42
7.2. Test Well 43
7.2.1. CSR to SuperMicro Cable Routing 43
7.3. CSR to SuperMicro (now obsolete) 43
7.3.1. CSR to SuperMicro CSR to SuperMicro DAC Cable Color-Code 43
7.4. CSR to SuperMicro 45
7.4.1. CSR to SuperMicroCSR to SuperMicro CAT 6e routing 45
7.4.2. 25 GIG Fiber Orientation 46
7.5. CSR to DELL DU 47
7.5.1. Normal CSR to Dell XR11 Plumbing Diagram 47
7.6. Olympic CSR (No native CU ports) to Dell XR11 Plumbing Diagram 48
7.6.1. CSR to DELL DU Cable Color-Code 48
7.6.2. 25 GIG Fiber Orientation 49
Great Lakes Cabinet 49

**8. BATTERY INSTALLATION 50**
8.1. Battery Unit Handling 50
8.2. Battery Bracket Installation Position 50
8.3. Battery Unit Spacing 52
8.4. Battery Cable Routing 53
8.5. Battery Communication Cables 54
8.6. SiteBoss Cable Termination 55
8.7. Cable Weatherseal 57
8.7.1. Install weatherseal boots over the RJ-45 ports and route all CAT-5 cables through the gland. 57
8.8. Battery Bracket Hardware 58


**This document is confidential and privileged to DISH. It is intended solely for use by DISH internal employees and DISH's approved vendors. Any other access or review of this document is prohibited. Any disclosure, copying or distribution, other than to DISH employees, is prohibited without DISH's consent in each instance. Hard copies of this document are not controlled and may not be current. Verify that the hard copy of this document is the most current by matching the revision and revision date to the master located in document storage.**

**9. TOWER** **59**
9.1. National Standard for Antenna Positions 59
9.2. Sector Ground Bars 60
9.3. Plumbing Diagram - RRHs to JMA Antenna 64
9.4. Plumbing Fiber 66
9.5. Power Booster 68
9.6. RRH Fiber Color-Code Tower Top OVP 69
9.7. Power Wires and Fibers in Tower OVP 70
9.7.1. Color Coding 70
9.8. Antenna RET 71
9.8.1. RET Naming Convention 71
9.8.2. RET naming example (Each sector) 71
9.9. Actuator ID 72
9.9.1. Alpha 72
9.9.2. Beta 72
9.9.3. Gamma 72
9.10. Radio Labeling 72
9.11. RRH Fiber Termination Assignments 72
9.12. RRH Power Termination Assignments 73
9.13. Hybrid 73
9.13.1. Fiber Number to CSR Ports 73
9.13.2. Hybrid Cable Fiber Routing to CSR 74
9.13.3. RRH Fiber Color-Code Labeling at CSR 75
9.13.4. Power Wire Color-Code at Rack Mounted OVP 76
9.13.5. Hybrid Cable Ground Termination 76
9.14. OVP Cabinet Breaker Labeling 76
9.15. RF Jumper Color-Code 78
9.16. Hybrid and Conduit Cabinet Entry Points 78
9.17. GPS Cabinet Entry Point 80
9.18. GPS Antenna Mount 82
9.19. GPS Cable 83

**10. POWER BOOSTER INSTALLATION** **84**
10.1. CHARLES AMPHENOL/GREAT LAKES 84
10.2. Power Booster Cabling 85
10.3. Raycap Power Booster Cable Part Numbers 88

**11. SITE FINALIZATION** **88**
11.1. Green Light Test (GLT) 88
11.2. Ready to Green Light means the following 89


**This document is confidential and privileged to DISH. It is intended solely for use by DISH internal employees and DISH's approved vendors. Any other access or review of this document is prohibited. Any disclosure, copying or distribution, other than to DISH employees, is prohibited without DISH's consent in each instance. Hard copies of this document are not controlled and may not be current. Verify that the hard copy of this document is the most current by matching the revision and revision date to the master located in document storage.**

11.3. COP Deliverables Uploaded to N1 Prior to GLT Request 89
11.4. Final Stamped Construction Drawing 91


**This document is confidential and privileged to DISH. It is intended solely for use by DISH internal employees and DISH's approved vendors. Any other access or review of this document is prohibited. Any disclosure, copying or distribution, other than to DISH employees, is prohibited without DISH's consent in each instance. Hard copies of this document are not controlled and may not be current. Verify that the hard copy of this document is the most current by matching the revision and revision date to the master located in document storage.**

# REFERENCE DOCUMENTS and NAMING CONVENTION

| Section Heading(s) | Document Information |
|---|---|
| Construction Drive \| 3 Tier Overview 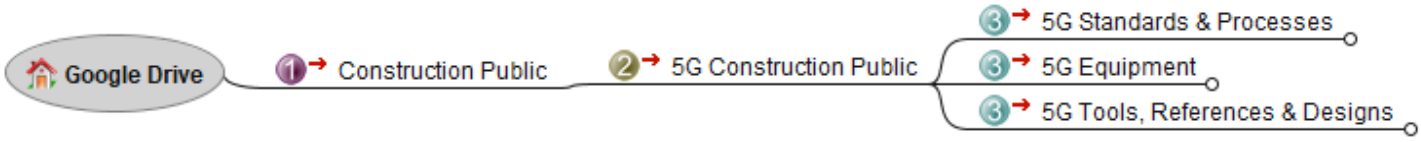  | |
| 5G Standards & Processes | Standards & Processes document. |
| 5G Equipment Specification | 5G Equipment Specification Folder |
| CCX-JA-60-002 - Vendor Contacts, Support & Manufacturer Installation Documents | Vendor Contacts, Support & Installation Documents spreadsheet provides links to OEM documentation such as user manuals and other detailed specification information as well as vendor contact details and Return Material Authorization (RMA) processes. |
| Confidential | Change Management related to documentation, product and parts. Includes current and proposed changes/improvements. |
| Construction Document Library *(expanding regularly to include other departments within wireless umbrella)* | This is the library of documents for the Construction (CCX) Department. This document has been adopted by departments under the DIsh Wireless umbrella and is continuing to be expanded. The construction department naming convention works as follows:<br><br>**Tier 1** I Construction Department Specific Identifier (CCX)<br><br>**Tier 2** I Document identifier is categorized in to **8 sections**, as follows**:**<br>1. **RISK** (RSK)<br>2. **Standards** (STND)<br>3. **Method of Procedure** (MOP)<br>4. **Quality Bulletin** (QB)<br>5. **Safety Bulletin** (SB)<br>6. **Standard Operating Procedure** (SOP)<br>7. **Scope of Work** (SOW) |




**This document is confidential and privileged to DISH. It is intended solely for use by DISH internal employees and DISH's approved vendors. Any other access or review of this document is prohibited. Any disclosure, copying or distribution, other than to DISH employees, is prohibited without DISH's consent in each instance. Hard copies of this document are not controlled and may not be current. Verify that the hard copy of this document is the most current by matching the revision and revision date to the master located in document storage.**

| | |
|---|---|
| | 8. **Job Aid** (JA)<br><br>**Tier 3** I 2 digit category Identifier number<br><br>**Tier 4** I Next consecutive number (001, 002 etc.) |




**This document is confidential and privileged to DISH. It is intended solely for use by DISH internal employees and DISH's approved vendors. Any other access or review of this document is prohibited. Any disclosure, copying or distribution, other than to DISH employees, is prohibited without DISH's consent in each instance. Hard copies of this document are not controlled and may not be current. Verify that the hard copy of this document is the most current by matching the revision and revision date to the master located in document storage.**

**CCX - XXXX - XX - XXX**

- CCX → Construction Department Identifier | **Tier 1**
- XXXX → Document Identifier Category (listed above) | **Tier 2**
- XX → 2 digit category Identifier number | **Tier 3**
- XXX → Next consecutive number (001, 002 etc.) | **Tier 4**

**Example**; **CCX-QB-28-001** would refer to a construction quality bulletin document related to batteries.




**This document is confidential and privileged to DISH. It is intended solely for use by DISH internal employees and DISH's approved vendors. Any other access or review of this document is prohibited. Any disclosure, copying or distribution, other than to DISH employees, is prohibited without DISH's consent in each instance. Hard copies of this document are not controlled and may not be current. Verify that the hard copy of this document is the most current by matching the revision and revision date to the master located in document storage.**

# 1. PURPOSE

This document provides requirements for the installation and/or removal of Dish's wireless communications equipment. These requirements apply to both internal Dish Wireless employees and contracted service providers.

It provides a comprehensive listing of the definitions of all specified construction standards, including references to industry accepted practices and standards.

# 2. REFERENCE DOCUMENTS

Set guidelines and common specifications for construction activities on DISH 5G installations.\

| Document | Title/Description |
|---|---|
| ANSI/TIA-222 | Structural Standards for Communication and Small Wind Turbine Support Structures |
| NEC Article 250-23 | Grounding and Bonding. National Electric Code. |
| GR-487-CORE | Telcordia standards |

# 3. SAFETY and COMPLIANCE REQUIREMENTS

## 3.1. PERSONAL and PROPERTY PROTECTION

**3.1.1.** DISH Wireless' ("DISH") general contractors ("GC") and subcontractors, shall be responsible for initiating, maintaining, and supervising a safe work environment and program, as it pertains to work on tower vendor sites, and will comply with all applicable state and federal laws, OSHA standards, and local ordinances, policies, and regulations.

**3.1.2.** DISH's GCs and subcontractors shall ensure that no unauthorized personnel shall be permitted to enter the work site, as well as take all reasonable precautions for the safety of, provide reasonable protection to, and shall prevent damage, injury or loss to:

3.1.2.1. Employees on said work site;
3.1.2.2. Other persons who may be affected;
3.1.2.3. Material and equipment
3.1.2.4. Other property at a work site or adjacent to work site

**3.1.3.** DISH's GC and subcontractors shall be responsible for (at a minimum):

3.1.3.1. Implementation of all general safety plans;
3.1.3.2. Conduct all necessary pre-work inspections of site, tools and equipment;
3.1.3.3. Implementation of a fall protection work site plan;
3.1.3.4. Implementation of a Radio Frequency ("RF") safety program;
3.1.3.5. Implementation of class 1-IV rigging plans;



**This document is confidential and privileged to DISH. It is intended solely for use by DISH internal employees and DISH's approved vendors. Any other access or review of this document is prohibited. Any disclosure, copying or distribution, other than to DISH employees, is prohibited without DISH's consent in each instance. Hard copies of this document are not controlled and may not be current. Verify that the hard copy of this document is the most current by matching the revision and revision date to the master located in document storage.**

3.1.3.6. Daily Job Safety Analysis ("JSA") plan and meetings or more frequently, if conditions change;

3.1.3.7. Shall comply with Federal and State regulations as well as all applicable standards and best practices related to communication structures (e.g. OSHA, NATE, ANSI A10.48, FCC, FAA, etc.).

3.1.3.8. In CA- Compliance with California Wildfire Emergency Order

**3.1.4.** DISH's GC and subcontractors are required to communicate and furnish (to DISH), their established work site safety program.

**3.1.5.** First Aid/Rescue- GC or subcontractor must provide necessary personnel for rescue and first aid, when necessary.

**3.1.6.** Accident/Incident Reporting- GC or subcontractor must report any accident or incident involving injury, property damage or DISH equipment damage to the DISH contact immediately or as soon as reasonable.

3.1.6.1. Pictures must be taken of broken equipment/property damage.

3.1.6.2. GC or subcontractor must conduct an investigation and submit to DISH contact.

**3.1.7.** Safety-related Regulatory Inspections- GC or subcontractor must report any State or Federal regulatory agency visit (if visit is related to work being performed) to the DISH contact immediately or as soon as reasonable.

**3.1.8.** Competent Workers- GC or subcontractor must ensure all workers are competent, and trained for the work being performed (e.g. competent climber/rescuer, competent rigger, etc.). Certifications may be collected before work is performed.

## 3.2. ENVIRONMENTAL

### 3.2.1. ACT Regulations

3.2.1.1. DISH's GC and subcontractors shall comply with all applicable federal (e.g. EPA and FCC), state, and local environmental laws including, but not limited to:

3.2.1.1.1. The Resource Conservation and Recovery Act ("RCRA");

3.2.1.1.2. The Clean Air Act ("CAA");

3.2.1.1.3. The Clean Water Act ("CWA");

3.2.1.1.4. The Toxic Substance Control Act;

3.2.1.1.5. The Endangered Species Act;

3.2.1.1.6. The Federal Migratory Bird Treaty Act;

3.2.1.1.7. Bald and Gold Eagle Protection Act;

3.2.1.1.8. National Environmental Protection Act;

3.2.1.1.9. The National Historic Preservation Act;

**3.2.2.** GC and subcontractors will be responsible for prompt response to, and corrective action of, any threat of potential harm to the environment caused by construction activities, and the incident must be reported to a DISH construction manager. This shall include reporting of hazardous substance and oil/petroleum releases in reportable quantities to the National Response Center and/or state and local authorities as applicable as well as notifying DISH at environmental.safety@dish.com.

**3.2.3.** GC and subcontractors will be responsible for ensuring any asbestos or lead abatement issues are identified and handled by licensed contractors.



**This document is confidential and privileged to DISH. It is intended solely for use by DISH internal employees and DISH's approved vendors. Any other access or review of this document is prohibited. Any disclosure, copying or distribution, other than to DISH employees, is prohibited without DISH's consent in each instance. Hard copies of this document are not controlled and may not be current. Verify that the hard copy of this document is the most current by matching the revision and revision date to the master located in document storage.**

**3.2.4.** GC and subcontractors will be responsible for proper handling and disposal of waste generated per federal, state and/or local laws/regulations/ordinances. This includes construction, hazardous and/or universal waste/debris.

# 4. ACRONYMS

COP - Close Out Package (NexsysOne)
GLT - Green Light Testing
PPC - Power Protection Cabinet
CSR - Cell Site Router
DU - Distribution Unit
OVP - Over-voltage Protection

# 5. GENERAL

## 5.1. GENERAL STANDARDS

### 5.1.1. DOCUMENT LINKS

5.1.1.1. As it relates to this document ("Document XYZ"), encapsulates project-specific scope, requirements, actions and/or assumptions associated with preliminary approval, pre-construction, construction, and post construction actions performed by DISH's GCs and subcontractors.

### 5.1.2. MATERIALS

5.1.2.1. All materials necessary for DISH 5G site installation must be ready for installation and correctly identified before RTC mobilization. DISH may ask for confirmation / visibility to a comprehensive bill of materials, prior to construction start or at any time during the construction cycle.

### 5.1.3. CONCRETE

5.1.3.1. Concrete shall develop a minimum compressive strength of 3000 PSI at (minimum) 28 days, and/or per regional and local jurisdictional specifications, whichever is greater.

5.1.3.2. Aggregate size not to exceed ¾ inch. Slump is to be 2" to 5".

5.1.3.3. GC shall take care when forming concrete to prevent blow out due to lack of bracing, slump or pump issues, or related oversight.

5.1.3.4. The GC or subcontractor is responsible for concrete wash-out containment and removal from site.

5.1.3.5. The GC or subcontractor must abide by OSHA's Silica Standard 1910


**This document is confidential and privileged to DISH. It is intended solely for use by DISH internal employees and DISH's approved vendors. Any other access or review of this document is prohibited. Any disclosure, copying or distribution, other than to DISH employees, is prohibited without DISH's consent in each instance. Hard copies of this document are not controlled and may not be current. Verify that the hard copy of this document is the most current by matching the revision and revision date to the master located in document storage.**

### 5.1.4. PADS

5.1.4.1. Pad steel or rebar will be deformed and conform to ASTM A615 Grade 60, and/or Grade 40 for ties.

5.1.4.2. Steel mesh shall conform to ASTM A185.

5.1.4.3. All pads shall be crowned with a broom finish and all edges shall be chamfered.

### 5.1.5. COMPOUND ENCLOSURE

5.1.5.1. Any new steel fence posts identified in a design must be grounded to an existing ground ring with 2 AWG bare tinned copper wire.

5.1.5.2. Any required new fencing, block wall or access gate, will be constructed with like-material, unless conversely directed by local jurisdiction and/or zoning requirements.

5.1.5.3. Any new gate(s) must adhere to required dimensions as per tower owner compound specifications per DISH construction drawings.

5.1.5.4. All new gate(s) must have a secure latching mechanism per DISH construction drawings and be affixed with a combination padlock or master key padlock.

5.1.5.5. If DISH is allowed to place their own lock on the new gate(s), the lock must be interlinked into a chain link series.

### 5.1.6. ELECTRICAL/TELCO

5.1.6.1. All electrical work shall meet Building Officials and Code Administrators (“BOCA”), Uniformed Building Code (“UBC”), National Electrical Code (“NEC”).

5.1.6.2. Licensed/bonded electricians must perform all electrical work as applicable.

5.1.6.3. All applicable local and state codes (electrical materials shall be UL approved) must be adhered to.

5.1.6.4. Outdoor, exposed conduit will be galvanized rigid or schedule 80 PVC (unless noted otherwise).

5.1.6.5. Ends of conduit, unistrut, or other metal materials that are cut to size must be filed and free of sharp burrs that may cause undue harm to person or property. In addition, all metal cut ends are to be sprayed with Cold-Galvanizing enamel paint to prevent corrosion.

5.1.6.6. Threaded pipe connections and conduit terminations that contain cable must incorporate a protective PVC bushing to prevent abrasion to cables.

5.1.6.7. Warning tape will be placed in the utility trench 1 foot above conduit after inspection and before backfilling (photo documentation is required).

5.1.6.8. Exterior outlets to be weather resistant GFCIs, protected with a weather cover.

5.1.6.9. DISH meter labeled with DISH provided placard (marker, tape, or any other adhesive not acceptable).

5.1.6.10. Temporary power may be required at certain sites for a period of time; temporary power will require advanced notification and approval by tower and/or property owners.



**This document is confidential and privileged to DISH. It is intended solely for use by DISH internal employees and DISH’s approved vendors. Any other access or review of this document is prohibited. Any disclosure, copying or distribution, other than to DISH employees, is prohibited without DISH’s consent in each instance. Hard copies of this document are not controlled and may not be current. Verify that the hard copy of this document is the most current by matching the revision and revision date to the master located in document storage.**

## 5.1.7. TOWER MOUNTED EQUIPMENT

### 5.1.7.1. ANTENNAS/RADIO/BACKHAUL

5.1.7.1.1. Installation of antenna, radio and/or backhaul mounting hardware shall be in accordance with manufacturers recommended standards.

5.1.7.1.2. Only DISH approved equipment to be installed on the tower, at approved RAD center + or - 1 foot, on the approved mount, per PE-stamped construction drawings.

5.1.7.1.3. Discrepancy with leased RAD center and/or obstruction of RAD center is to be reported to a DISH construction manager for visibility and corrective action reporting.

5.1.7.1.4. Installation crews must comply with manufacturer specifications for tightening hardware to specific torque measurements. This shall include, but not limited to, any equipment placed at height such as sector antennas, sector mounts, and microwave antennas and mounts. Torque marks must be made with a high-visibility, colored-paint marking pen, across the tightening nut and bolt threads.

### 5.1.7.2. CABLE

5.1.7.2.1. In the event of damage to existing tenant's antennas and/or coax as a result of new cable installation, a DISH construction manager is to be notified immediately.

5.1.7.2.2. When coax is being installed on the outside of a monopole it must be banded every 4' with stainless steel banding and hangars, with approval in SA or by written documentation from tower owner representatives.

5.1.7.2.3. Interior monopole coax installation will be dressed neatly inside the pole; note - no new ports will be cut into the pole unless called out in an approved structural analysis (SA).

5.1.7.2.4. Cables will not interfere with tower climbing pegs and any existing tenant mounted equipment.

5.1.7.2.5. For self-support towers (SST), coax will be clipped, banded or secured by the method outlined in the approved structural analysis and on the designated face. Vertically run coax will be attached to the tower at a minimum of every 4 feet.

5.1.7.2.6. Support cables within 18" of each connector at an antenna/radio/diplexer/tma, and every 3 feet for horizontal runs, 4 feet for vertical runs.

5.1.7.2.7. If using metal snap-ins, then rubber grommets must be used as well.

5.1.7.2.8. Stacking cables must comply with manufacturer's recommendations.

5.1.7.2.9. DISH allows use of various types of cable support including snap-ins; however, any metal support must include a cushion or grommet to prevent abrasion of cables.

5.1.7.2.10. Zip-ties, Ty-raps, and other similar plastic or PVC cable ties are NOT to be used on any cabling on a tower, rooftop, or base station compound, unless approved in writing by a DISH construction manager or specifically detailed in a site's stamped construction drawings.



**This document is confidential and privileged to DISH. It is intended solely for use by DISH internal employees and DISH's approved vendors. Any other access or review of this document is prohibited. Any disclosure, copying or distribution, other than to DISH employees, is prohibited without DISH's consent in each instance. Hard copies of this document are not controlled and may not be current. Verify that the hard copy of this document is the most current by matching the revision and revision date to the master located in document storage.**

5.1.7.2.11. When not supported by an approved cable support, fiber jumper cables may be managed with Velcro tape or wraps. If fiber cables are loosely fitting or otherwise sagging between supports, Velcro may be used as supplemental support.

5.1.7.2.12. Grounding cables may not be supported by a fully enclosing metal cable support product.

5.1.7.2.13. Tower top hybrid cable breakouts must be attached with (2) supports, whenever possible, to a structurally sound component of the tower at least 4 feet beyond the egress of the tower's porthole. This is to prevent blocking the port from future cable installations.

5.1.7.2.14. Ethernet cables, or similar transmission cables connected to microwave antennas, must include a single service loop, meeting the product manufacturer's recommendations, at the antenna end to facilitate re-connectorizing if necessary.

5.1.7.2.15. RF cables must extend 6" or greater beyond the connector before it enters its first bend.

5.1.7.3. **MOUNTING**

5.1.7.3.1. Mounts will be placed in such a manner to not impede safety climbs or climbing pegs. In the event a safety climb cable is impeded by the installation, it is the contractor's responsibility to remedy the situation.

5.1.7.3.2. Only a DISH approved mount is to be installed on the tower, at the approved RAD center, per PE-stamped construction drawings. The assigned construction manager and DISH Central Construction team must approve necessary deviations from the design in writing.

5.1.7.3.3. In the event of damage to existing tenant's antennas and/or coax, as a result of new tower mount installation, a DISH construction manager is to be notified immediately. Any scratches or chips to the tower's paint or galvanizing will require immediate corrective action.

5.1.7.3.4. Chain mounts are not acceptable, unless prior approvals have been obtained or detailed in construction drawings.

5.1.7.3.5. Any substitutions to standard mounts and/or parts must be approved by a DISH construction manager.

5.1.7.3.6. All mounting attachment hardware is to be marked with a torque mark after installation.

## 5.1.8. COAX and FIBER ROUTING (THROUGH COMPOUND or LEASE AREA)

5.1.8.1. **ICE BRIDGE**

5.1.8.1.1. The minimum clearance under the ice bridge, including coax, will be eight feet.

5.1.8.1.2. A clear and unobstructed access between ice bridge posts will be maintained, with a minimum of 4 feet of separation between posts and a maximum of 10 feet.

5.1.8.1.3. No ice bridge posts are to be placed in another tenant's lease area, the tower foundation, or in a place where it would impede access to shelters, cabinets, door swings or gates.


**This document is confidential and privileged to DISH. It is intended solely for use by DISH internal employees and DISH's approved vendors. Any other access or review of this document is prohibited. Any disclosure, copying or distribution, other than to DISH employees, is prohibited without DISH's consent in each instance. Hard copies of this document are not controlled and may not be current. Verify that the hard copy of this document is the most current by matching the revision and revision date to the master located in document storage.**

5.1.8.2. **SLEEPERS**

5.1.8.2.1. Yellow reflective tape shall be placed on the sides of sleepers to prevent tripping or injury.

5.1.8.2.2. If a sleeper is placed in an area where it is obstructing access to an existing tenant's equipment, a ramp access will be added.

5.1.8.3. **UNDERGROUND COAX**

5.1.8.3.1. 8-1-1 locations shall be completed to ensure there are no underground obstructions.

5.1.8.3.2. Any damage to existing underground coax or conduit will be GC responsibility to repair or replace.

5.1.8.3.3. All underground conduit shall be a minimum schedule 40 PVC and will be sealed on each end with either a cap, insulating foam or other acceptable method.

5.1.8.4. **WALL MOUNTING**

5.1.8.4.1. All wall-mounted coax should be inside a cable tray, or covered to protect from damage.

5.1.8.4.2. Attachments should be made every 4 feet to the compound enclosure walls.

5.1.8.4.3. Wall mountings are to be clear of any existing equipment, and will not impede any access.

**5.1.9. DISH MINIMUM GROUNDING AND BONDING**

5.1.9.1.1. Dish grounding requirements may be amended at any time to incorporate additional requirements specified by a 3rd Party. Please refer to section 2.0 References of this document for additional documentation relating to updated grounding specifications.

5.1.9.2. **General Grounding Notes**

5.1.9.2.1. All grounding shall meet or exceed all federal, state and local jurisdiction regulations.

5.1.9.2.2. Grounding installations will comply with ANSI/TIA-222 and NEC.

5.1.9.2.3. All ground rings shall be a minimum of 2 AWG bare tinned solid wire.

5.1.9.2.4. Use of flex conduit to sleeve over exposed grounding leads is <u>not required.</u>

5.1.9.2.5. Use of a sector bus bar is required if there are more than (2) components on a standoff or sector frame.

5.1.9.3. **Materials**

5.1.9.3.1. All grounding materials including, but not limited to the below listed items, shall be manufactured products that meet industry standards (e.g. the applicable revision of ANSI/TIA-222)

5.1.9.3.2. **Wire and Cable Grounding Conductors**

5.1.9.3.2.1. Ground ring conductors must be 2 AWG, bare tinned, copper wire, for all below-grade, exterior conductors and ground bar conductors, or unless specified otherwise in the construction drawings.

5.1.9.3.2.2. Grounding conductors must be a minimum 2 AWG, insulated stranded copper wire for exterior, above-grade grounds and ground bar connections.



**This document is confidential and privileged to DISH. It is intended solely for use by DISH internal employees and DISH's approved vendors. Any other access or review of this document is prohibited. Any disclosure, copying or distribution, other than to DISH employees, is prohibited without DISH's consent in each instance. Hard copies of this document are not controlled and may not be current. Verify that the hard copy of this document is the most current by matching the revision and revision date to the master located in document storage.**

5.1.9.3.2.3. 2 AWG, bare stranded copper wire is to be used for interior halo ground rings, unless specified otherwise.

5.1.9.3.2.4. Tower top radio, GPS antenna, and hybrid cable ground conductors must be minimum 6 AWG insulated stranded copper wire unless specified otherwise.

5.1.9.3.3. **Connectors**

All Connectors shall be compression-type connectors with two-hole lugs, unless noted otherwise.

5.1.9.3.4. Grounding Electrodes, Enhancement Materials, and Inspection Wells

5.1.9.3.4.1. Ground Rods

Ground rods shall be made of copper-clad steel, except in cases where nearby steel or galvanized steel could contribute to galvanic corrosion; in these cases, stainless steel rods will be required.

5.1.9.3.4.2. Chemical Rods

A licensed engineer shall specify chemical rods. Chemical rod installation shall comply with the manufacturer's recommendations and CDs.

5.1.9.3.4.3. Copper Ground Plates

Copper ground plates shall be 24-inch x 24-inch x ¼-inch, manufactured as a flat bar or with jagged or zigzagged, sheared edges.

5.1.9.3.4.4. Grounding Enhancement Material

A low-resistance (usually carbon-based) material used to fill around the grounding conductor before backfilling may be used to lower grounding resistance.

5.1.9.3.4.5. Inspection Wells

Inspection wells, or test wells, are installed on site to check the resistivity of the ground ring installation using an Ohm meter. Inspection wells are to be installed per the following (see figure below for more detail):

5.1.9.3.4.6. Grounding inspection wells shall be of PVC construction as per the CDs and/or the DISH 5G Construction Standards.

5.1.9.3.4.7. Top cover of the well shall be set flush with the finished grade.

5.1.9.3.4.8. The ground test loop within the inspection well shall be set 6 inches below the well cover.

**5.1.9.3.5. Bonding Preparation and Finish**

5.1.9.3.5.1. All surfaces are to be sanded or grinded to expose the raw steel surface before bonding ground conductor(s).

5.1.9.3.5.2. Exothermic bonds (except bus bars) shall be finished with the application of cold galvanizing spray when applicable.

5.1.9.3.5.3. Anti-oxidation compounds shall be applied to all exterior ground connections.

5.1.9.3.5.4. UV-rated black heat shrink shall be used on all exterior grounding connections; clear heat shrink shall be used on all interior connections

**5.1.9.3.6. Installation**



**This document is confidential and privileged to DISH. It is intended solely for use by DISH internal employees and DISH's approved vendors. Any other access or review of this document is prohibited. Any disclosure, copying or distribution, other than to DISH employees, is prohibited without DISH's consent in each instance. Hard copies of this document are not controlled and may not be current. Verify that the hard copy of this document is the most current by matching the revision and revision date to the master located in document storage.**

5.1.9.3.6.1. Tower grounding systems shall maintain a resistance of 5 ohms or less to ground.

5.1.9.3.6.2. Grounding conductors shall be as short and straight as possible.

5.1.9.3.6.3. Attach ground lugs to ground bars with stainless hardware only.

5.1.9.3.6.4. Contractor shall repair, and/or replace, existing grounding system components damaged during construction at the contractor's expense.

5.1.9.3.6.5. Exothermic welding system required to be used with all below-grade grounding bonds or as specified in the construction drawings.

5.1.9.3.6.6. DISH's ground ring must be tied into the existing tower ring by at least one solid, tinned copper conductor.

#### 5.1.9.3.7. Antenna/Sector Ground Bar (AGB/ASB)

5.1.9.3.7.1. Tower top collector bus bars utilize the tower's path-to-ground and shall be installed without isolators.

5.1.9.3.7.2. Sector bus bars shall utilize isolators, and each sector bar shall be grounded to the tower top collector bus bar utilizing #6 AWG ground cable.

5.1.9.3.7.3. Support hardware used for RF/Power/Fiber cabling may also be used for ground wires; however, metal supports that would completely surround the ground wire are not permissible without the use of a rubber grommet.

#### 5.1.9.3.8. Ground Rod and Ring Placement Below-Grade

5.1.9.3.8.1. Below-grade grounding components, including ground rods, shall be installed at a minimum depth of 30 inches below grade or 6 inches below the frost line, whichever is deeper.

5.1.9.3.8.2. Ground rods will be placed a minimum of one rod-length apart along the ground ring.

5.1.9.3.8.3. Interconnect the grounds using #2 AWG solid tinned copper grounding conductors.

5.1.9.3.8.4. All below-grade connections shall be exothermically bonded.

5.1.9.3.8.5. All exothermic welds must be coated with cold galvanizing spray after the bond is made to protect from corrosion.

5.1.9.3.8.6. A grounding test loop must be installed in a test well when applicable as illustrated in the construction drawings.

5.1.9.3.8.7. DISH's ground ring is to connect to the tower owner's ground ring with two (2) connection points, with a minimal separation of 6 feet unless otherwise noted on the DISH construction drawings.

#### 5.1.9.3.9. Above-Grade Grounding

5.1.9.3.9.1. Compression lugs require black heat shrink to be applied.

5.1.9.3.9.2. Bus bars used at ground level, and the lowest tower bus bar, shall be connected to structures utilizing insulators.

5.1.9.3.9.3. Exothermic welds are required on all ice bridge post connections.

5.1.9.3.9.4. All grounding conductors embedded in or penetrating concrete shall be installed in PVC schedule 80



**This document is confidential and privileged to DISH. It is intended solely for use by DISH internal employees and DISH's approved vendors. Any other access or review of this document is prohibited. Any disclosure, copying or distribution, other than to DISH employees, is prohibited without DISH's consent in each instance. Hard copies of this document are not controlled and may not be current. Verify that the hard copy of this document is the most current by matching the revision and revision date to the master located in document storage.**

5.1.9.3.9.5. Any existing grounding systems utilized for DISH equipment shall maintain a resistance of 5 Ohms or less to ground.

**5.1.9.3.10. Equipment Lease Space**

5.1.9.3.10.1. Connection to ground either by directly attaching leads to an existing grounding halo, building steel, or by connecting to an exterior ground ring via a ground bar is required.

5.1.9.3.10.2. The equipment grounding conductors shall be bonded to all metallic junction boxes, pull boxes, disconnect switches, starters, and equipment.

5.1.9.3.10.3. Attach ground conductors to floor or wall using approved anchoring methods per DISH construction drawings or manufactured specifications.

5.1.9.3.10.4. Equipment racks must be connected to grounding halo or bus bar in two (2) locations using #2 AWG stranded, green-insulated, copper wire using mechanical connections (compression lugs/C-taps).

**5.1.9.3.11. Utility Pole-Wood or Metal**

5.1.9.3.11.1. If no grounding system exists, #2 AWG bare solid tinned copper wire shall be used for the main down lead (or utility requirement) connecting to a ground rod near the base of the pole using a copper mechanical ground clamp.

5.1.9.3.11.2. Ground rods shall be placed a minimum of 24 inches away from pole base, as required.

5.1.9.3.11.3. #6 AWG green insulated stranded wire shall be used to connect components to the main down lead.

**5.1.9.3.12. Rooftops**

5.1.9.3.12.1. The contractor shall route grounding conductors from the rooftop to the existing or approved grounding system per details of construction drawings.

5.1.9.3.12.2. Written approval from the building engineer and a DISH construction manager is required for any modification/deviation from stamped construction drawings.

5.1.9.3.12.3. Install equipment grounding conductors in conduits to comply with the NEC standards.

5.1.9.3.12.4. The equipment grounding conductors shall be bonded to all metallic junction boxes, pull boxes, disconnect switches, starters, and equipment.

5.1.9.3.12.5. Firmly attach ground conductors to the floor or wall using approved anchoring methods defined in general construction standards or drawings.

**5.1.9.3.13. Generator, Receptacle and Fuel Tank Grounding**

5.1.9.3.13.1. Generator fuel tanks will be connected at a minimum of one (1) location to the main grounding ring. The connection will be made with an Exothermic weld and will be made with #2 AWG bare solid copper to the ground ring from the tank leg to the ground ring or rod.



**This document is confidential and privileged to DISH. It is intended solely for use by DISH internal employees and DISH's approved vendors. Any other access or review of this document is prohibited. Any disclosure, copying or distribution, other than to DISH employees, is prohibited without DISH's consent in each instance. Hard copies of this document are not controlled and may not be current. Verify that the hard copy of this document is the most current by matching the revision and revision date to the master located in document storage.**

5.1.9.3.13.2. The generator receptacle plug will be connected at a minimum of one (1) location to the main grounding ring. The connection will be made with an Exothermic weld and will be made with #2 AWG bare solid copper to the ground ring.

**5.1.9.3.14. Ice Bridge and Cable Tray Grounding**

5.1.9.3.14.1. Ice Bridge and cable trays will be grounded exothermically to the ground ring.

5.1.9.3.14.2. Each pole of the Ice Bridge will be individually grounded with one connection to the base of the pole and ground ring.

5.1.9.3.14.3. Cable tray will be grounded with a two-hole lug to the tray and one connection exothermically to the ground ring.

**5.1.9.3.15. Bend Radius of Grounding**

5.1.9.3.15.1. Ground conductors connected to the grounding system will not have a bend smaller than a (1) foot radius and right angle (90 degree) bends are not allowed (NFPA 780-2004, section 4.9.5 and ANSI T1.313-2003).

**5.1.9.3.16. Grounding Systems Testing**

5.1.9.3.16.1. All ground systems installed will be tested. The resistance to ground will be measured using a ground resistance testing clamp-style digital multimeter. Testing will be performed after installation and before backfilling the trenching. The testing resistance will measure 5 ohms or less.

**5.1.9.3.17. Excavation and Backfill**

5.1.9.3.17.1. Excavation and Fill shall be minimized or completely avoided for all work except for trenching an external grounding system or removal of structures and obstructions.

5.1.9.3.17.2. Contact 8-1-1 locates as indicated on drawing no less than three working days before performing work.

5.1.9.3.17.3. Protect existing utilities.

5.1.9.3.17.4. Protect plant life, lawns, rock outcropping, and other features remaining as a portion of final landscaping.

5.1.9.3.17.5. Protect benchmarks, survey control points, existing structures, fences, sidewalks, paving, and curbs from excavating equipment and vehicular traffic.

5.1.9.3.17.6. Excavate topsoil from areas to be further excavated, re-landscaped, or re-graded without mixing with foreign materials for use in finish grading.

5.1.9.3.17.7. Excavate subsoil to accommodate building foundations, structures, slabs-on-grade, paving, landscaping, and construction operations.

5.1.9.3.17.8. Remove excess and unsuitable material from the site.

5.1.9.3.17.9. Provide ditches, berms, and other devices to divert and drain surface water from the excavation area as indicated on the drawings.

**5.1.9.3.18. Backfill**

5.1.9.3.18.1. Support foundation walls and structures before backfilling.



**This document is confidential and privileged to DISH. It is intended solely for use by DISH internal employees and DISH's approved vendors. Any other access or review of this document is prohibited. Any disclosure, copying or distribution, other than to DISH employees, is prohibited without DISH's consent in each instance. Hard copies of this document are not controlled and may not be current. Verify that the hard copy of this document is the most current by matching the revision and revision date to the master located in document storage.**

5.1.9.3.18.2. Slope grade away from building minimum 2 percent slope for minimum distance of 10 feet, unless noted otherwise.

5.1.9.3.18.3. Compact subgrade to density requirements for subsequent backfill materials.

5.1.9.3.18.4. Systematically backfill to allow maximum time for natural settlement.

5.1.9.3.18.5. Protect structures, utilities, and other facilities from damage caused by settlement, lateral movement, undermining, washout, and other hazards created by earth operations.

5.1.9.3.18.6. Repair or replace items damaged by excavation or filling.

5.1.9.3.18.7. Install a weed barrier below landscaping rock within the compound.

#### 5.1.9.3.19. Testing

5.1.9.3.19.1. Reports

5.1.9.3.19.1.1. GC will provide copies of any special inspections required by tower owner or jurisdiction as noted in the DISH RTC package.

5.1.9.3.19.1.2. GC will provide copies of test results or certifications to a DISH construction manager, where applicable.

#### 5.1.9.3.20. Material Storage

5.1.9.3.20.1. GC or subcontractor assumes responsibility for materials left on site during construction.

5.1.9.3.20.2. Material must not block access to any other existing tenant's equipment or the tower.

5.1.9.3.20.3. No material is to be stored on the tower owner's property unless prior consent has been granted.

5.1.9.3.20.4. All items (e.g. tools, extra cabling, etc.) must be removed when construction is complete.

5.1.9.3.20.5. General work area is to be kept clean and hazard-free during construction, and all debris and rubbish disposed of appropriately according to State and Federal guidelines (see Environmental section).

5.1.9.3.20.6. Remove equipment not specified as remaining on the property or premises.

5.1.9.3.20.7. If material is approved to be left on site, it must be protected from the elements to prevent moisture intrusion.

#### 5.1.9.3.21. Signage

5.1.9.3.21.1. No "DISH Wireless" tenant signage is allowed to be placed on the gate, fence, compound enclosure or the tower.

5.1.9.3.21.2. DISH signage should only be placed on equipment or shelter to include the site number and an emergency contact phone number.



**This document is confidential and privileged to DISH. It is intended solely for use by DISH internal employees and DISH's approved vendors. Any other access or review of this document is prohibited. Any disclosure, copying or distribution, other than to DISH employees, is prohibited without DISH's consent in each instance. Hard copies of this document are not controlled and may not be current. Verify that the hard copy of this document is the most current by matching the revision and revision date to the master located in document storage.**

# 6. CIVIL

## 6.1. H-Frame

### 6.1.1. Location on Platform

6.1.1.1. Set frame poles 14” from the edge of the platform to the pole face.

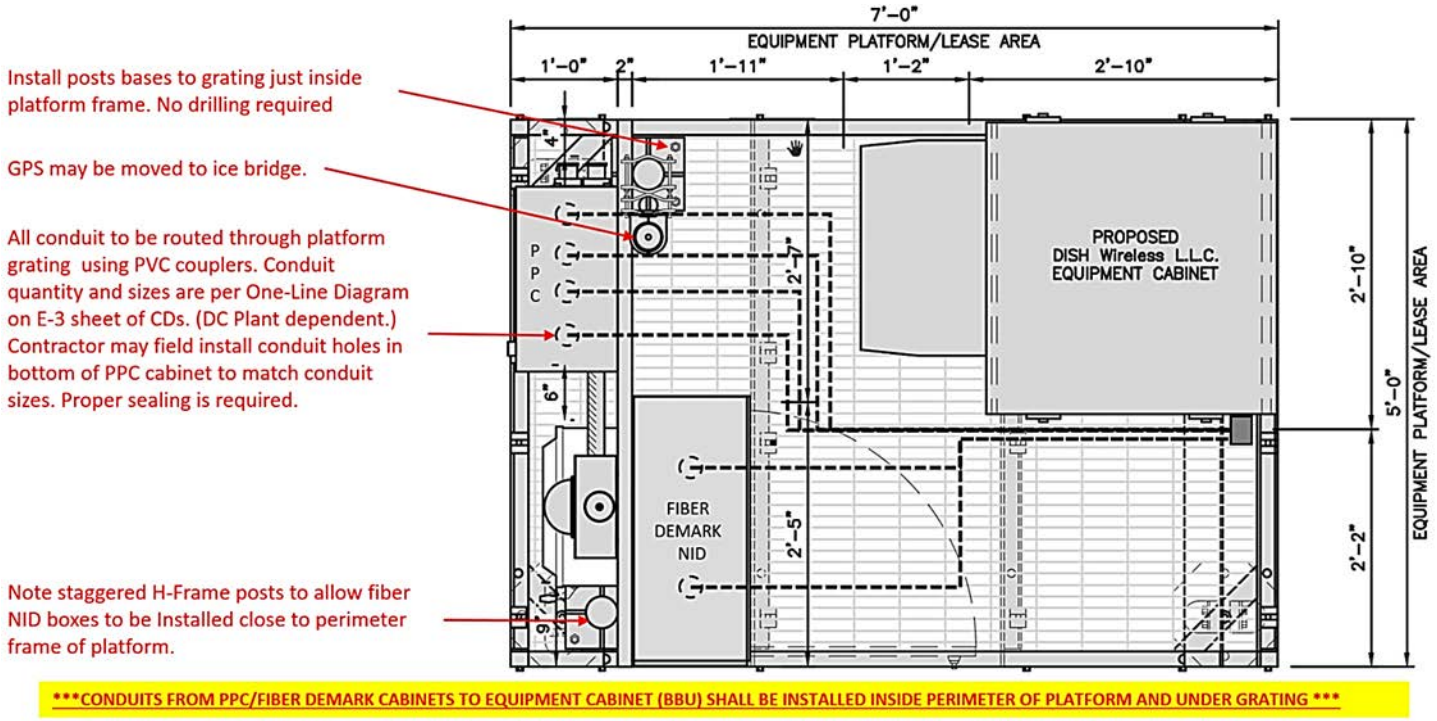


**Example:** Platform Equipment Plan




**This document is confidential and privileged to DISH. It is intended solely for use by DISH internal employees and DISH’s approved vendors. Any other access or review of this document is prohibited. Any disclosure, copying or distribution, other than to DISH employees, is prohibited without DISH’s consent in each instance. Hard copies of this document are not controlled and may not be current. Verify that the hard copy of this document is the most current by matching the revision and revision date to the master located in document storage.**

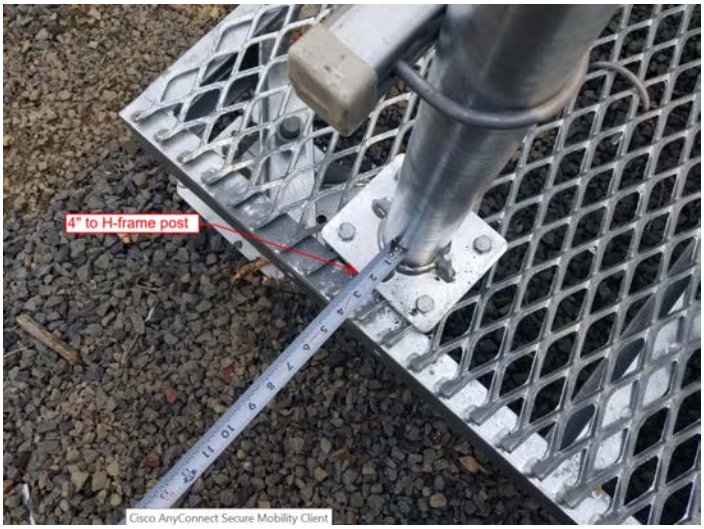


**Example:** H-Frame Location on Platform




**This document is confidential and privileged to DISH. It is intended solely for use by DISH internal employees and DISH's approved vendors. Any other access or review of this document is prohibited. Any disclosure, copying or distribution, other than to DISH employees, is prohibited without DISH's consent in each instance. Hard copies of this document are not controlled and may not be current. Verify that the hard copy of this document is the most current by matching the revision and revision date to the master located in document storage.**

### 6.1.2. Commscope Modular Platform Clip Position

**Example:** Correct Placement

**Example:** Incorrect Placement

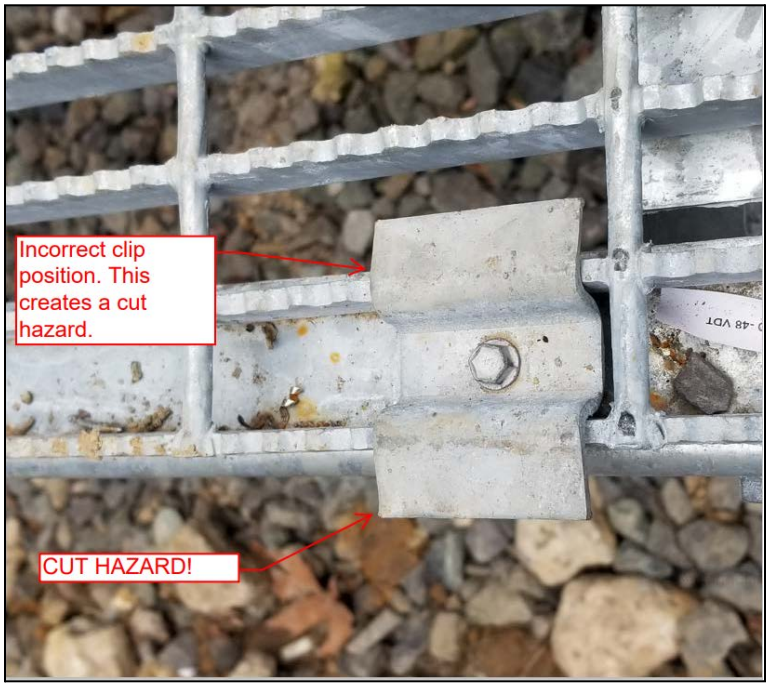





**This document is confidential and privileged to DISH. It is intended solely for use by DISH internal employees and DISH's approved vendors. Any other access or review of this document is prohibited. Any disclosure, copying or distribution, other than to DISH employees, is prohibited without DISH's consent in each instance. Hard copies of this document are not controlled and may not be current. Verify that the hard copy of this document is the most current by matching the revision and revision date to the master located in document storage.**

### 6.1.3. PPC and Telco Cabinet Mounting

6.1.3.1. Mount both cabinets on the outside of the H-frame where possible.

**Example:** Mounted Cabinets




**This document is confidential and privileged to DISH. It is intended solely for use by DISH internal employees and DISH's approved vendors. Any other access or review of this document is prohibited. Any disclosure, copying or distribution, other than to DISH employees, is prohibited without DISH's consent in each instance. Hard copies of this document are not controlled and may not be current. Verify that the hard copy of this document is the most current by matching the revision and revision date to the master located in document storage.**

### 6.1.4. PPC and Telco Cabinet Orientation

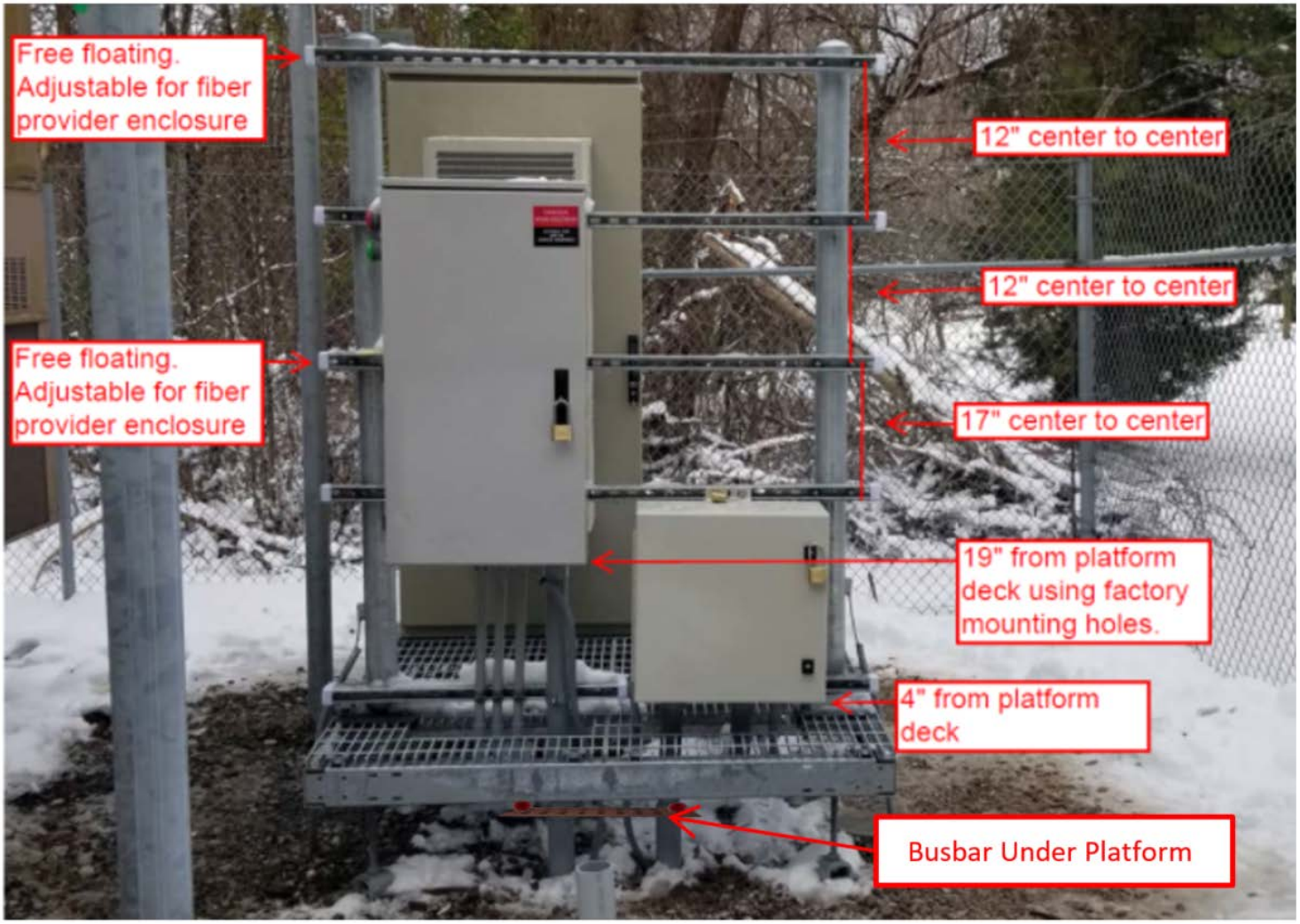


**Example:** PPC and Telco Cabinet Orientation




**This document is confidential and privileged to DISH. It is intended solely for use by DISH internal employees and DISH's approved vendors. Any other access or review of this document is prohibited. Any disclosure, copying or distribution, other than to DISH employees, is prohibited without DISH's consent in each instance. Hard copies of this document are not controlled and may not be current. Verify that the hard copy of this document is the most current by matching the revision and revision date to the master located in document storage.**

## 6.2. Equipment Grounding

### 6.2.1. Ground Installation.

6.2.1.1. Install the platform ground bar underneath the platform to help prevent theft. Some markets have been able to eliminate the platform ground bar by grounding equipment directly to the ground ring. Consult your DISH CM for local practices.

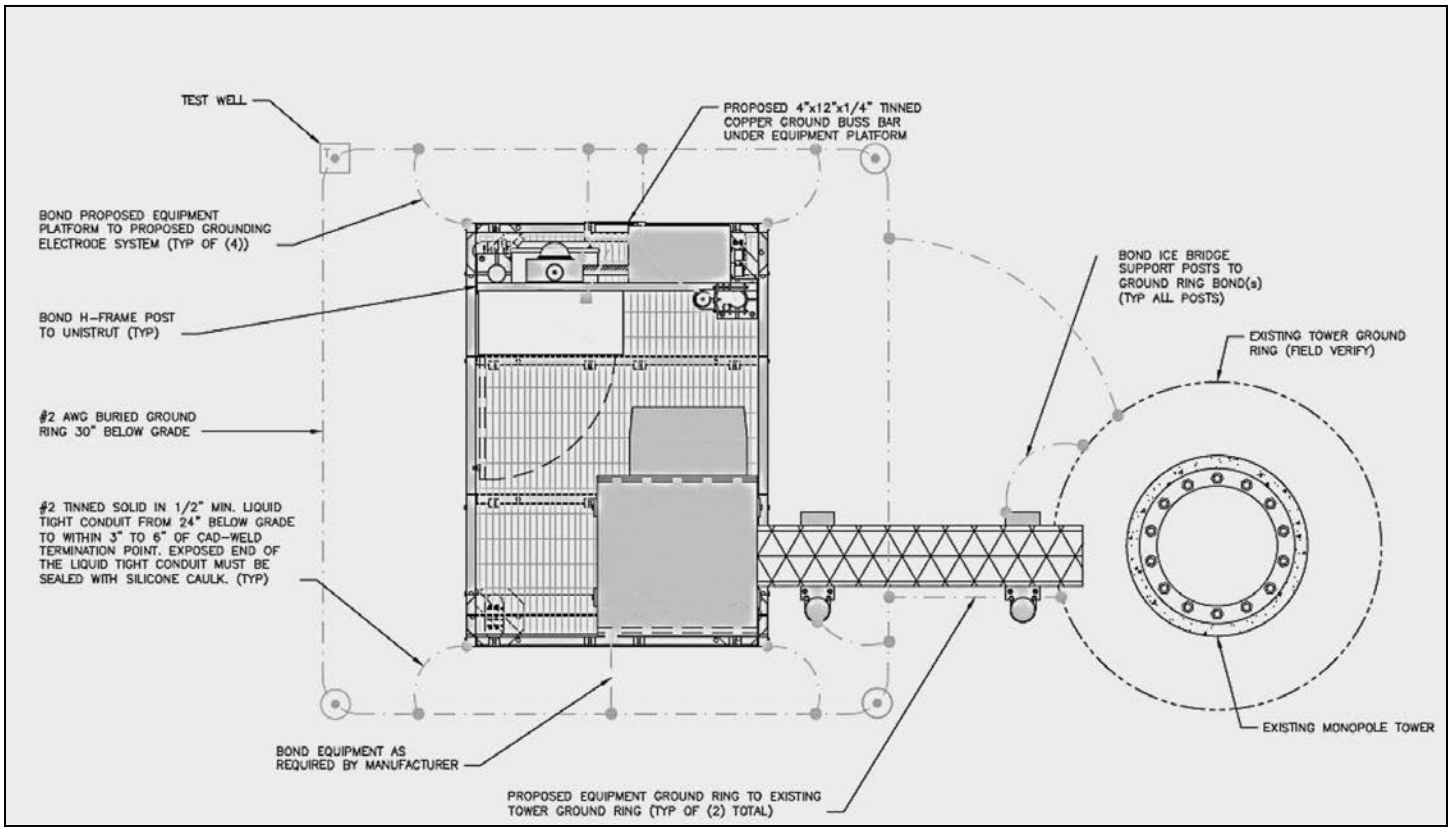


**Example:** Equipment Grounding




**This document is confidential and privileged to DISH. It is intended solely for use by DISH internal employees and DISH's approved vendors. Any other access or review of this document is prohibited. Any disclosure, copying or distribution, other than to DISH employees, is prohibited without DISH's consent in each instance. Hard copies of this document are not controlled and may not be current. Verify that the hard copy of this document is the most current by matching the revision and revision date to the master located in document storage.**

### 6.2.2. Caulking

6.2.2.1. All external flex conduit must be sealed with outdoor rated caulk.

**Example:** Unsealed Conduit

### 6.2.3. Great Lakes/Charles Cabinet Cable/Conduit Penetration

6.2.3.1. Myer hubs must be used for all flex conduit entries to maintain the cabinets NEMA 4 rating.

6.2.3.2. Apply duct seal to all conduits at both ends.

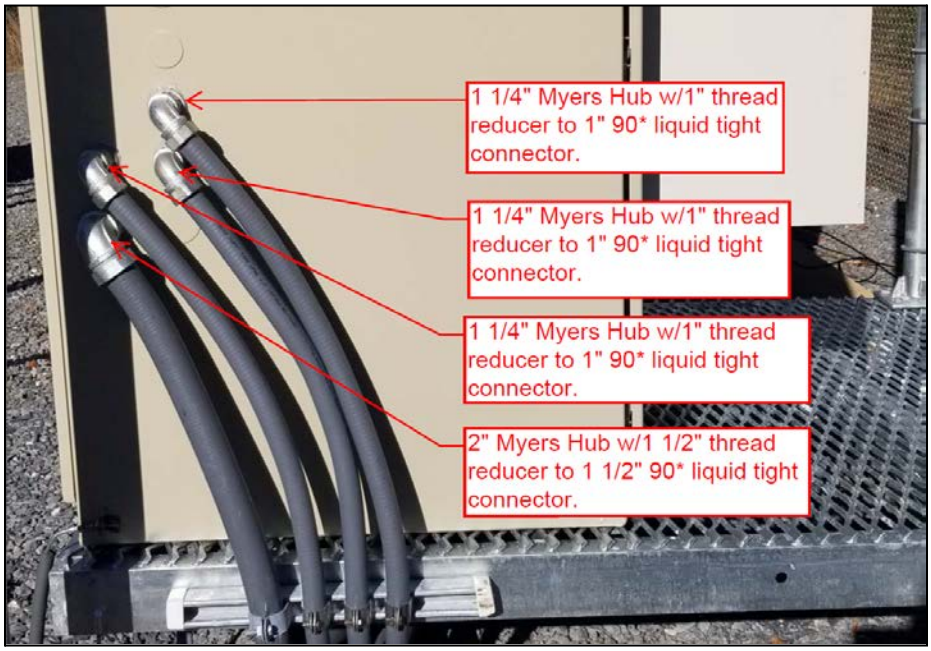


**Example:** Cable/Conduit Penetration - 1




**This document is confidential and privileged to DISH. It is intended solely for use by DISH internal employees and DISH's approved vendors. Any other access or review of this document is prohibited. Any disclosure, copying or distribution, other than to DISH employees, is prohibited without DISH's consent in each instance. Hard copies of this document are not controlled and may not be current. Verify that the hard copy of this document is the most current by matching the revision and revision date to the master located in document storage.**

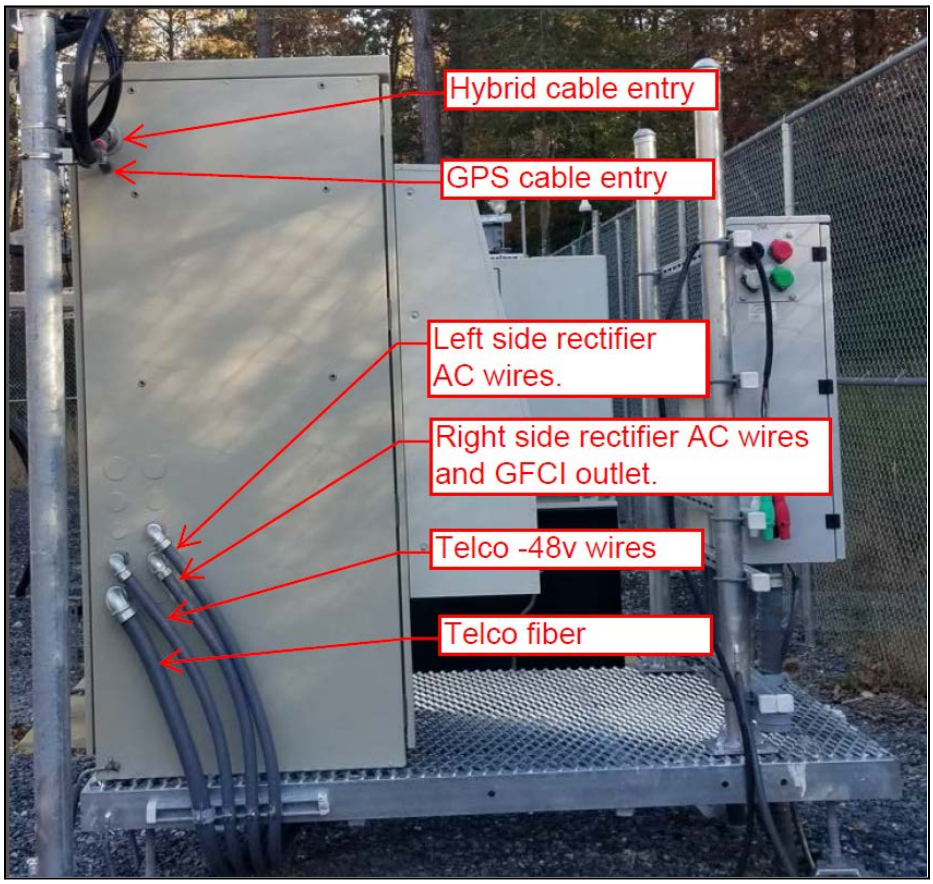


**Example:** Cable/Conduit Penetration - 2




**This document is confidential and privileged to DISH. It is intended solely for use by DISH internal employees and DISH's approved vendors. Any other access or review of this document is prohibited. Any disclosure, copying or distribution, other than to DISH employees, is prohibited without DISH's consent in each instance. Hard copies of this document are not controlled and may not be current. Verify that the hard copy of this document is the most current by matching the revision and revision date to the master located in document storage.**

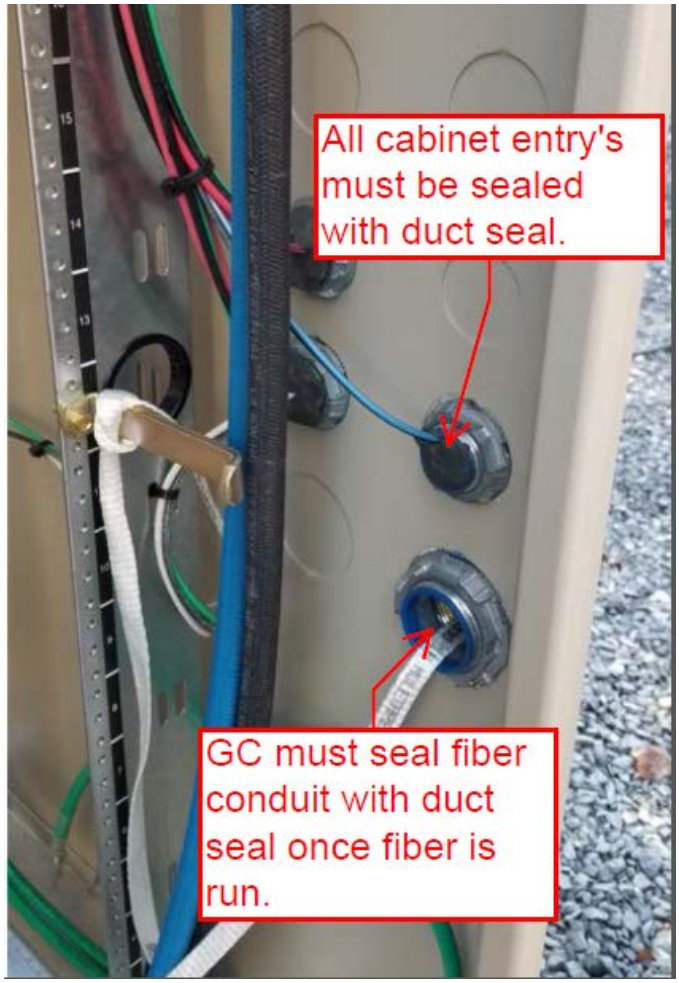

**Example:** Cable/Conduit Penetration - 3




**This document is confidential and privileged to DISH. It is intended solely for use by DISH internal employees and DISH's approved vendors. Any other access or review of this document is prohibited. Any disclosure, copying or distribution, other than to DISH employees, is prohibited without DISH's consent in each instance. Hard copies of this document are not controlled and may not be current. Verify that the hard copy of this document is the most current by matching the revision and revision date to the master located in document storage.**

### 6.2.4. PPC and Telco Conduit

6.2.4.1. Dish recommends the use of end bells to protect the conduits.

6.2.4.2. Connect the top and bottom end bells using PVC pipe.

**Example:** PPC and Telco Conduit End Bells - 1

**Example:** PPC and Telco Conduit End Bells - 2




**This document is confidential and privileged to DISH. It is intended solely for use by DISH internal employees and DISH's approved vendors. Any other access or review of this document is prohibited. Any disclosure, copying or distribution, other than to DISH employees, is prohibited without DISH's consent in each instance. Hard copies of this document are not controlled and may not be current. Verify that the hard copy of this document is the most current by matching the revision and revision date to the master located in document storage.**

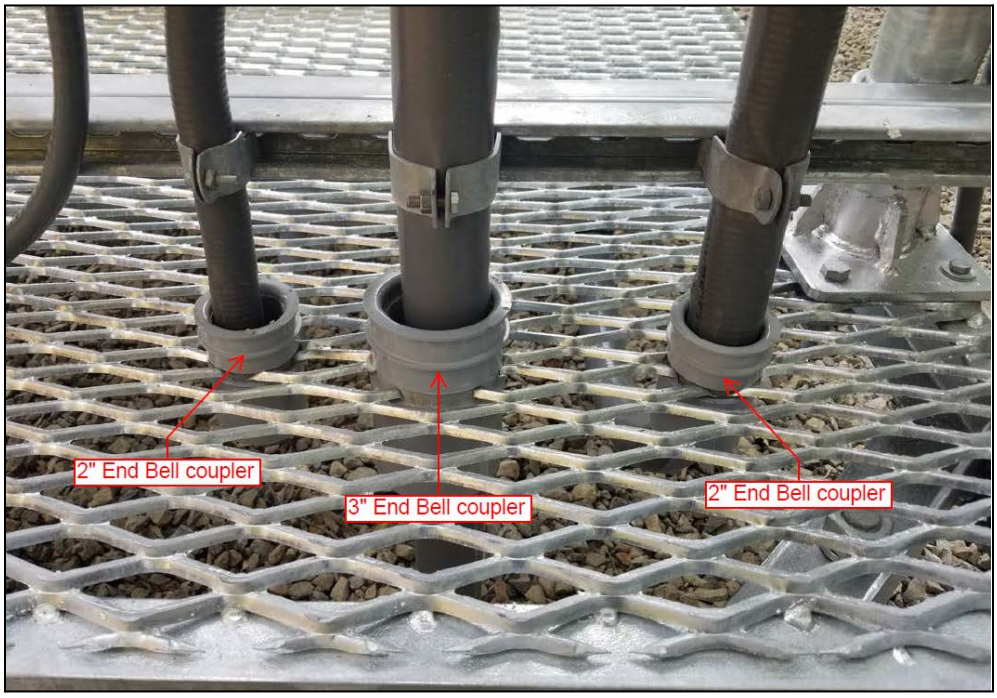


**Example:** PPC and Telco Conduit End Bells - 3

**Example:** PPC and Telco Conduit End Bells - 4




**This document is confidential and privileged to DISH. It is intended solely for use by DISH internal employees and DISH's approved vendors. Any other access or review of this document is prohibited. Any disclosure, copying or distribution, other than to DISH employees, is prohibited without DISH's consent in each instance. Hard copies of this document are not controlled and may not be current. Verify that the hard copy of this document is the most current by matching the revision and revision date to the master located in document storage.**

**Example:** PPC and Telco Conduit End Bells - 5




**This document is confidential and privileged to DISH. It is intended solely for use by DISH internal employees and DISH's approved vendors. Any other access or review of this document is prohibited. Any disclosure, copying or distribution, other than to DISH employees, is prohibited without DISH's consent in each instance. Hard copies of this document are not controlled and may not be current. Verify that the hard copy of this document is the most current by matching the revision and revision date to the master located in document storage.**

# End Bells

## End Bells

| Part No. | Size | Std. Ctn. Qty. | Std. Ctn. Wt. (lbs.) |
|---|---|---|---|
| ▶ E997F | 1 | 50 | 1 |
| ▶ E997F-CAR | 1 | 15 | 1 |
| ▶ E997G | 1 1/4 | 35 | 1 |
| ▶ E997G-CAR | 1 1/4 | 15 | 1 |
| ▶ E997H | 1 1/2 | 30 | 1 |
| ▶ E997H-CAR | 1 1/2 | 10 | 1 |
| ▶ E997J | 2 | 40 | 1 |
| ▶ E997J-CAR | 2 | 10 | 1 |
| ▶ E997K | 2 1/2 | 30 | 2 |
| ▶ E997K-CAR | 2 1/2 | 10 | 2 |
| ▶ E997L | 3 | 50 | 2 |
| ▶ E997L-CAR | 3 | 10 | 2 |
| ▶ E997M | 3 1/2 | 40 | 10 |
| ▶ E997N | 4 | 30 | 11 |
| ▶ E997P | 5 | 15 | 10 |
| ▶ E997R | 6 | 10 | 7.4 |
| ▶ E997T | 8 | 3 | 14.55 |

**Example:** PPC and Telco Conduit End Bells - 6




**This document is confidential and privileged to DISH. It is intended solely for use by DISH internal employees and DISH's approved vendors. Any other access or review of this document is prohibited. Any disclosure, copying or distribution, other than to DISH employees, is prohibited without DISH's consent in each instance. Hard copies of this document are not controlled and may not be current. Verify that the hard copy of this document is the most current by matching the revision and revision date to the master located in document storage.**

## 6.3. Rectifier

### 6.3.1. Rectifier Positioning

6.3.1.1. Populate left to right, top to bottom.

**Example:** Rector Positioning

### 6.3.2. Rectifier Shelf AC Wiring

6.3.2.1. Example below is for an ABB Infinity plant. Reference electrical one-lines and cabinet specific installation instructions. (ADD LINK)




**This document is confidential and privileged to DISH. It is intended solely for use by DISH internal employees and DISH's approved vendors. Any other access or review of this document is prohibited. Any disclosure, copying or distribution, other than to DISH employees, is prohibited without DISH's consent in each instance. Hard copies of this document are not controlled and may not be current. Verify that the hard copy of this document is the most current by matching the revision and revision date to the master located in document storage.**

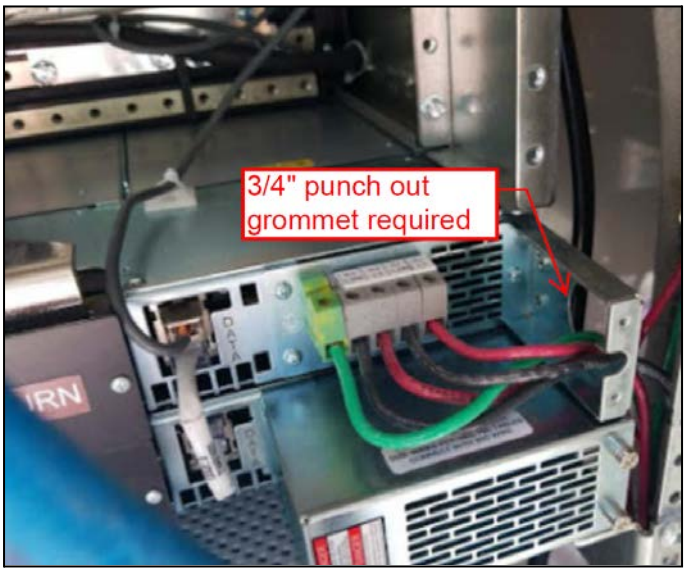


**Example:** Rectifier Shelf AC Wiring

## 6.4. AC Power

### 6.4.1. AC Power routing.

**Example:** AC Power Routing in Cabinet




**This document is confidential and privileged to DISH. It is intended solely for use by DISH internal employees and DISH's approved vendors. Any other access or review of this document is prohibited. Any disclosure, copying or distribution, other than to DISH employees, is prohibited without DISH's consent in each instance. Hard copies of this document are not controlled and may not be current. Verify that the hard copy of this document is the most current by matching the revision and revision date to the master located in document storage.**

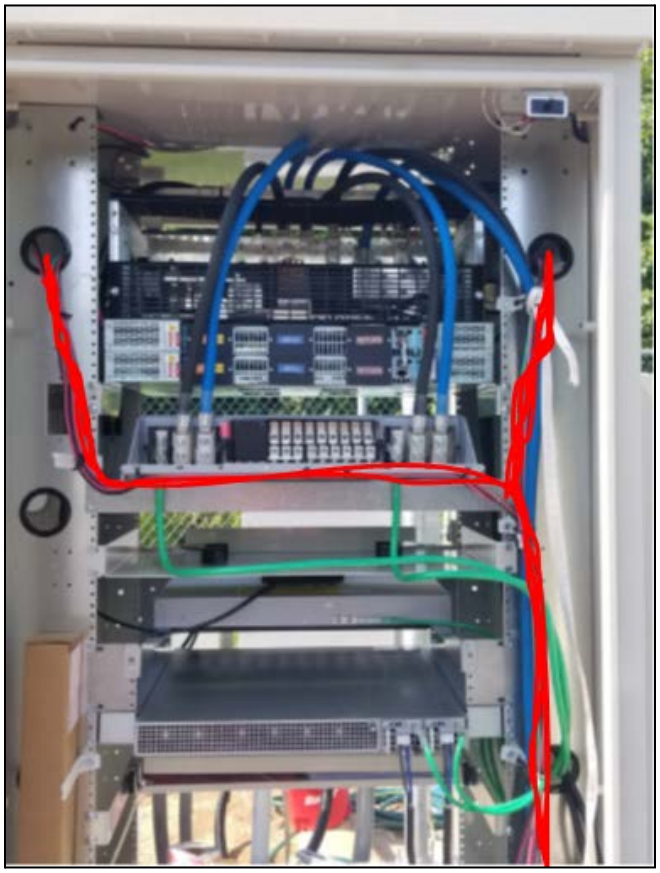

**Example:** AC Power Circuit Routing

## 6.5. Telco Box Circuit and Wire Size

### 6.5.1. Circuit Breaker and Cabling

6.5.1.1. Circuit breaker must have 12 AWG -48V supply and return cables that will reach the Ciena box.

6.5.1.2. Install one 6 AWG ground wire and one 10 AWG ground wire.




**This document is confidential and privileged to DISH. It is intended solely for use by DISH internal employees and DISH's approved vendors. Any other access or review of this document is prohibited. Any disclosure, copying or distribution, other than to DISH employees, is prohibited without DISH's consent in each instance. Hard copies of this document are not controlled and may not be current. Verify that the hard copy of this document is the most current by matching the revision and revision date to the master located in document storage.**

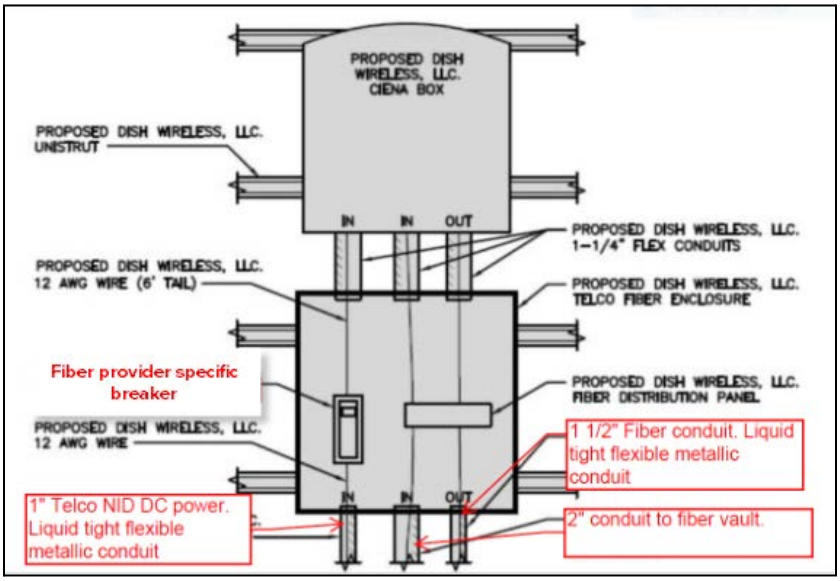


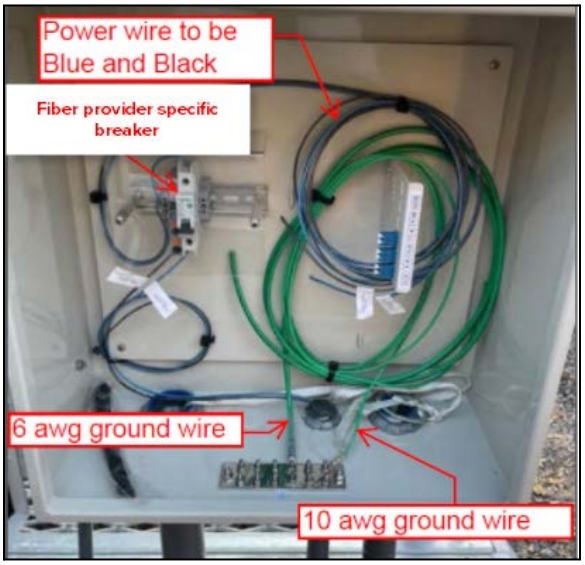


**Example:** Telco Box Circuit and Wire Size

## 6.6. Meters

### 6.6.1. Markings & Disconnect

6.6.1.1. GCs must install engraved phenolic nameplates at meters and disconnects.

**Example:** Nameplate at Meter




**This document is confidential and privileged to DISH. It is intended solely for use by DISH internal employees and DISH's approved vendors. Any other access or review of this document is prohibited. Any disclosure, copying or distribution, other than to DISH employees, is prohibited without DISH's consent in each instance. Hard copies of this document are not controlled and may not be current. Verify that the hard copy of this document is the most current by matching the revision and revision date to the master located in document storage.**

## 6.7. Test Well

### 6.7.1. Test Well Requirements

6.7.1.1. Test Well must be installed flush with grade.

6.7.1.2. Install 6” PVC around the ground loop.

**Example:** Test Well




**This document is confidential and privileged to DISH. It is intended solely for use by DISH internal employees and DISH’s approved vendors. Any other access or review of this document is prohibited. Any disclosure, copying or distribution, other than to DISH employees, is prohibited without DISH’s consent in each instance. Hard copies of this document are not controlled and may not be current. Verify that the hard copy of this document is the most current by matching the revision and revision date to the master located in document storage.**

# 7. CABINET

## 7.1. CSR to SuperMicro

### 7.1.1. CSR to SuperMicro

#### 7.1.1.1. Normal CSR to SuperMicro Plumbing Diagram

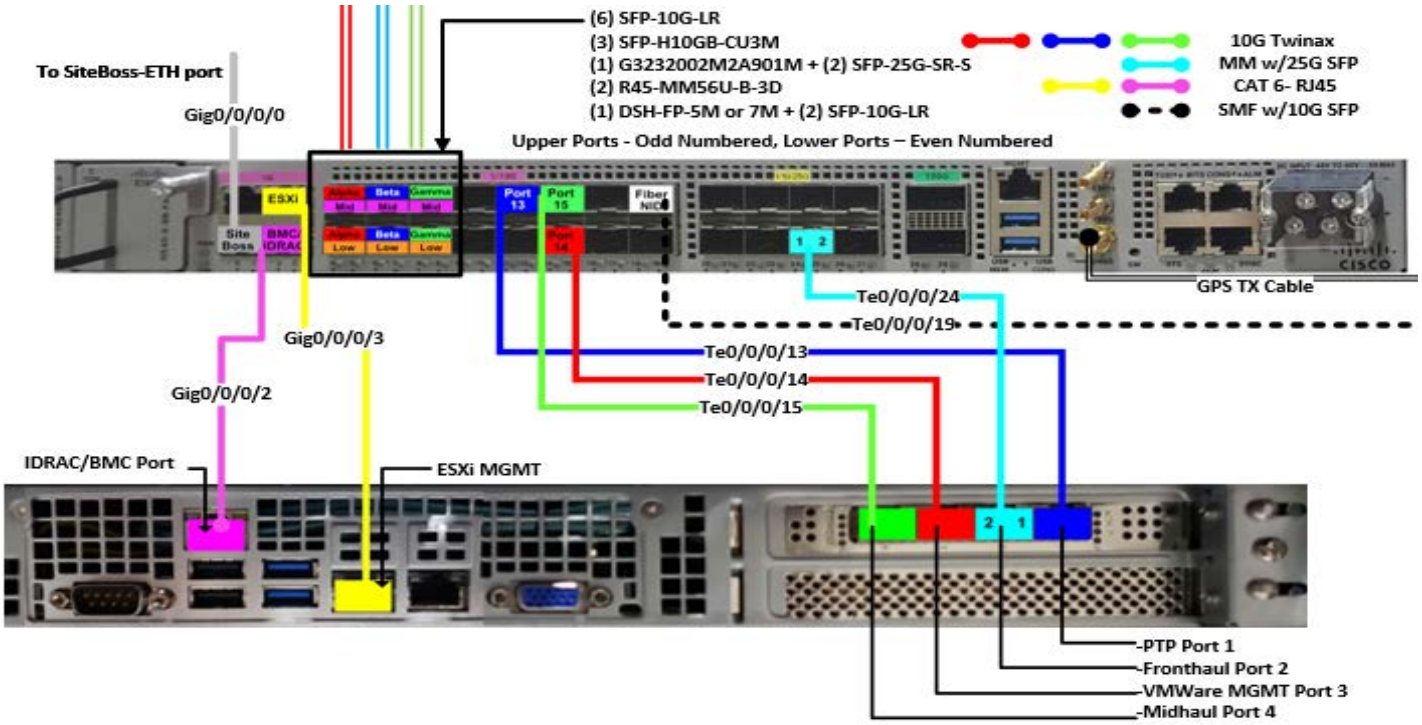


**Example:** CSR to SuperMicro Plumbing Diagram




**This document is confidential and privileged to DISH. It is intended solely for use by DISH internal employees and DISH's approved vendors. Any other access or review of this document is prohibited. Any disclosure, copying or distribution, other than to DISH employees, is prohibited without DISH's consent in each instance. Hard copies of this document are not controlled and may not be current. Verify that the hard copy of this document is the most current by matching the revision and revision date to the master located in document storage.**

## 7.2. Test Well

### 7.2.1. CSR to SuperMicro Cable Routing

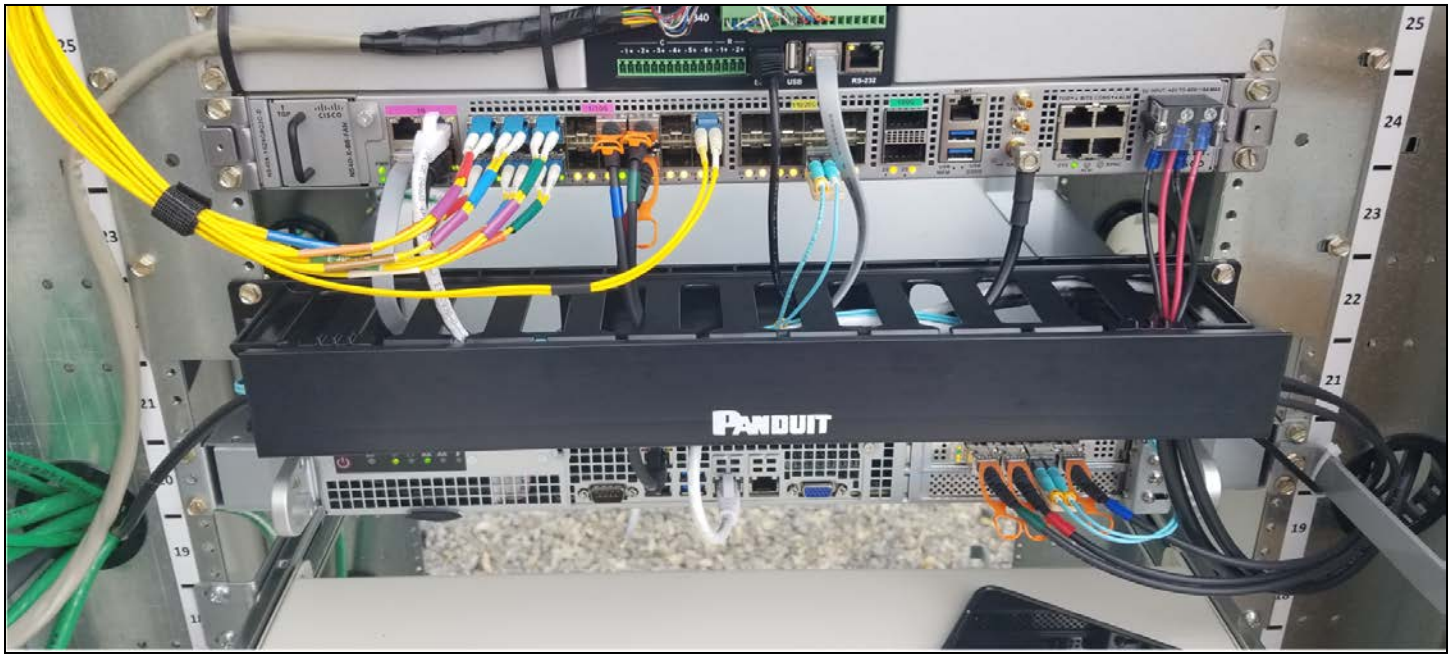


**Example:** CSR to SuperMicro Cable Routing

## 7.3. CSR to SuperMicro (now obsolete)

### 7.3.1. CSR to SuperMicro CSR to SuperMicro DAC Cable Color-Code

**Example:** CSR




**This document is confidential and privileged to DISH. It is intended solely for use by DISH internal employees and DISH's approved vendors. Any other access or review of this document is prohibited. Any disclosure, copying or distribution, other than to DISH employees, is prohibited without DISH's consent in each instance. Hard copies of this document are not controlled and may not be current. Verify that the hard copy of this document is the most current by matching the revision and revision date to the master located in document storage.**

**Example:** DU




**This document is confidential and privileged to DISH. It is intended solely for use by DISH internal employees and DISH's approved vendors. Any other access or review of this document is prohibited. Any disclosure, copying or distribution, other than to DISH employees, is prohibited without DISH's consent in each instance. Hard copies of this document are not controlled and may not be current. Verify that the hard copy of this document is the most current by matching the revision and revision date to the master located in document storage.**

## 7.4. CSR to SuperMicro

### 7.4.1. CSR to SuperMicroCSR to SuperMicro CAT 6e routing

**Example:** CSR

**Example:** DU




**This document is confidential and privileged to DISH. It is intended solely for use by DISH internal employees and DISH's approved vendors. Any other access or review of this document is prohibited. Any disclosure, copying or distribution, other than to DISH employees, is prohibited without DISH's consent in each instance. Hard copies of this document are not controlled and may not be current. Verify that the hard copy of this document is the most current by matching the revision and revision date to the master located in document storage.**

### 7.4.2. 25 GIG Fiber Orientation

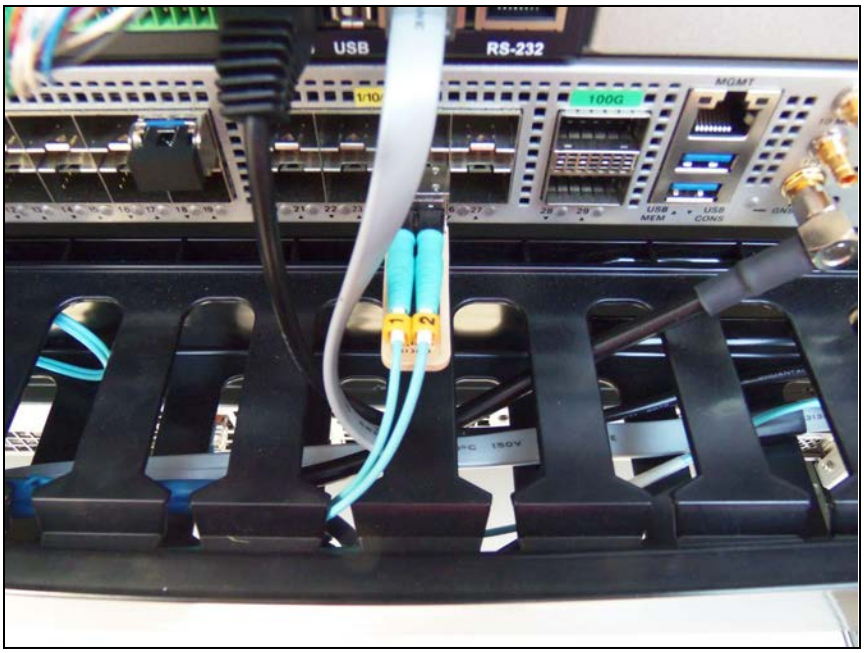


**Example:** CSR 1-2

**Example: Example:** DU 2-1




**This document is confidential and privileged to DISH. It is intended solely for use by DISH internal employees and DISH's approved vendors. Any other access or review of this document is prohibited. Any disclosure, copying or distribution, other than to DISH employees, is prohibited without DISH's consent in each instance. Hard copies of this document are not controlled and may not be current. Verify that the hard copy of this document is the most current by matching the revision and revision date to the master located in document storage.**

## 7.5. CSR to DELL DU

### 7.5.1. Normal CSR to Dell XR11 Plumbing Diagram

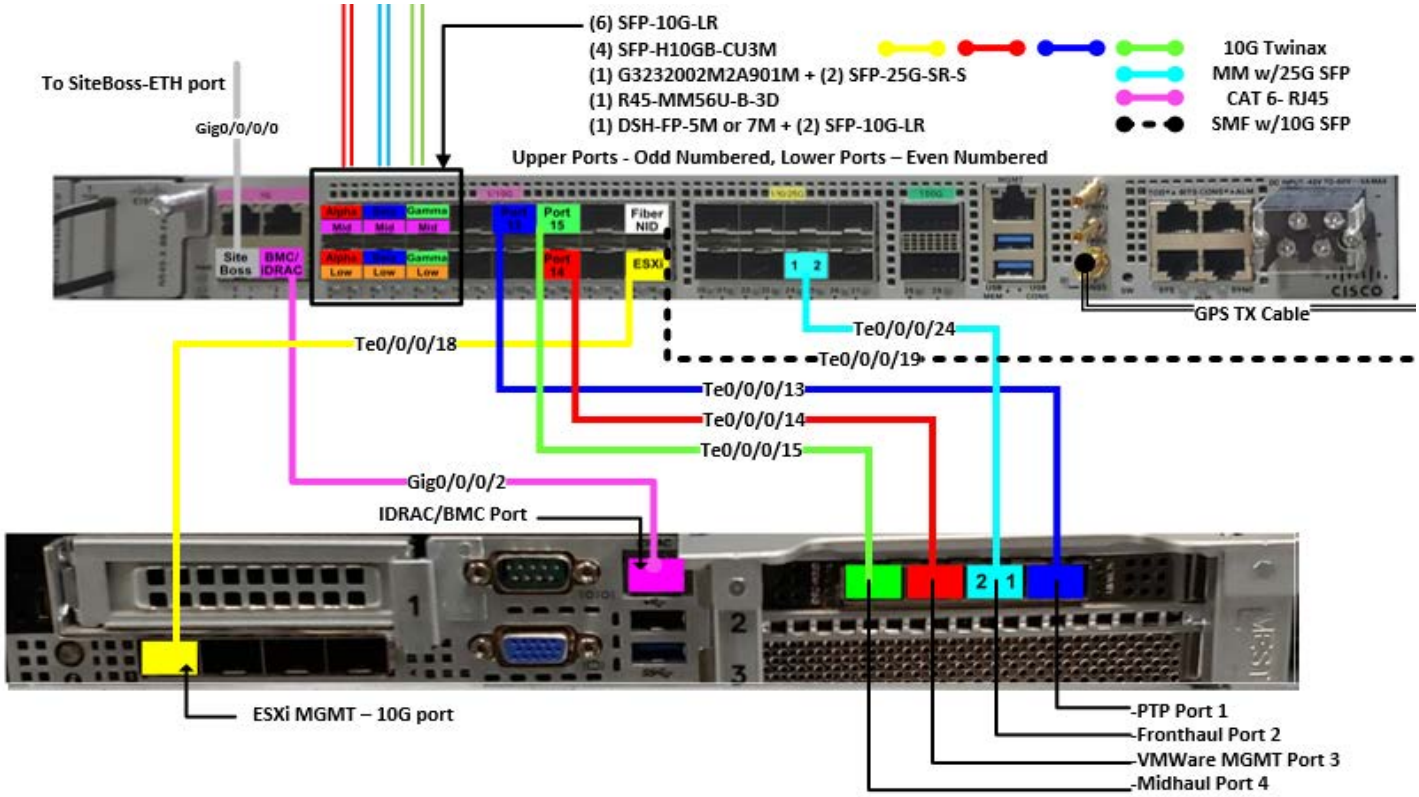





**This document is confidential and privileged to DISH. It is intended solely for use by DISH internal employees and DISH's approved vendors. Any other access or review of this document is prohibited. Any disclosure, copying or distribution, other than to DISH employees, is prohibited without DISH's consent in each instance. Hard copies of this document are not controlled and may not be current. Verify that the hard copy of this document is the most current by matching the revision and revision date to the master located in document storage.**

## 7.6. Olympic CSR (No native CU ports) to Dell XR11 Plumbing Diagram

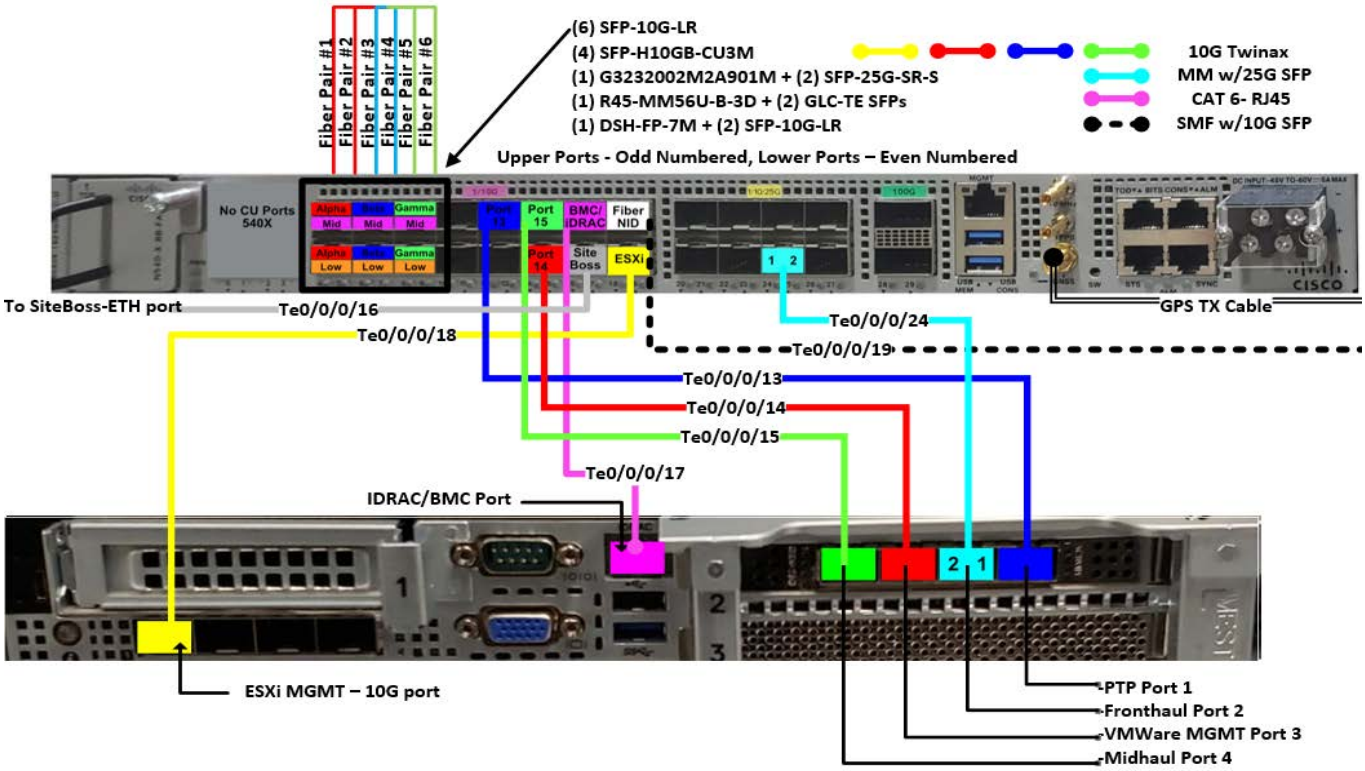


### 7.6.1. CSR to DELL DU Cable Color-Code

**Example:** CSR

**Example:** DU




**This document is confidential and privileged to DISH. It is intended solely for use by DISH internal employees and DISH's approved vendors. Any other access or review of this document is prohibited. Any disclosure, copying or distribution, other than to DISH employees, is prohibited without DISH's consent in each instance. Hard copies of this document are not controlled and may not be current. Verify that the hard copy of this document is the most current by matching the revision and revision date to the master located in document storage.**

### 7.6.2. 25 GIG Fiber Orientation

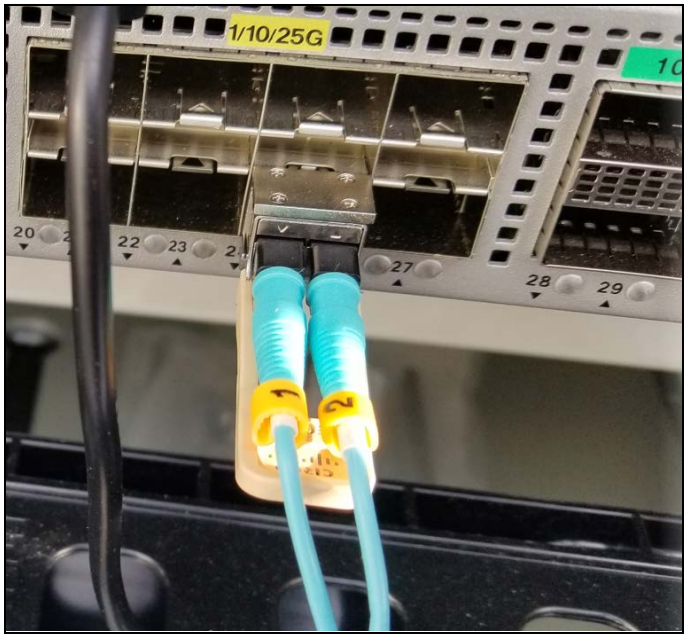


**Example:** CSR

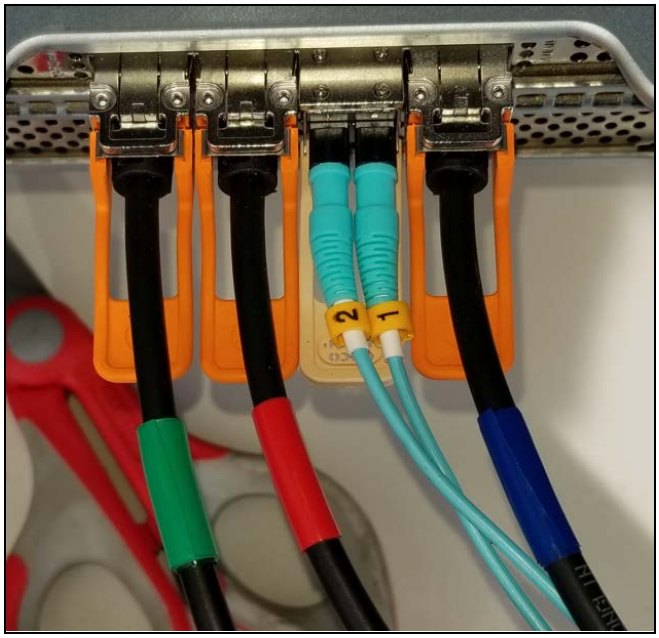

**Example:** DU

## Great Lakes Cabinet

- Back door latches have white isolators that provide additional compression to the door
- The isolators are required for the door to be correctly sealed
- The isolators tend to fall off easily, and must be replaced if missing
- Top outside isolators are intentionally missing
- Submit a fault report, and contact Chuck for replacements (charles.iversen@dish.com)




**This document is confidential and privileged to DISH. It is intended solely for use by DISH internal employees and DISH's approved vendors. Any other access or review of this document is prohibited. Any disclosure, copying or distribution, other than to DISH employees, is prohibited without DISH's consent in each instance. Hard copies of this document are not controlled and may not be current. Verify that the hard copy of this document is the most current by matching the revision and revision date to the master located in document storage.**

**Example:** White Isolator

# 8. BATTERY INSTALLATION

## 8.1. Battery Unit Handling

**8.1.1.** Battery units should remain in packaging until immediately before installation.

**8.1.2.** Battery units must not be exposed to water.

**8.1.3.** Ensure all cabinet entry points are completely weathersealed.

**8.1.4.** Avoid opening cabinet doors when precipitation is present.

## 8.2. Battery Bracket Installation Position

**8.2.1.** Battery brackets must be installed at the front and rear of every battery unit.

**8.2.2.** Contact your local DISH CM immediately if rear brackets are not shipped with the battery units.




**This document is confidential and privileged to DISH. It is intended solely for use by DISH internal employees and DISH's approved vendors. Any other access or review of this document is prohibited. Any disclosure, copying or distribution, other than to DISH employees, is prohibited without DISH's consent in each instance. Hard copies of this document are not controlled and may not be current. Verify that the hard copy of this document is the most current by matching the revision and revision date to the master located in document storage.**

**Example:** Battery Bracket Installation Position - 1

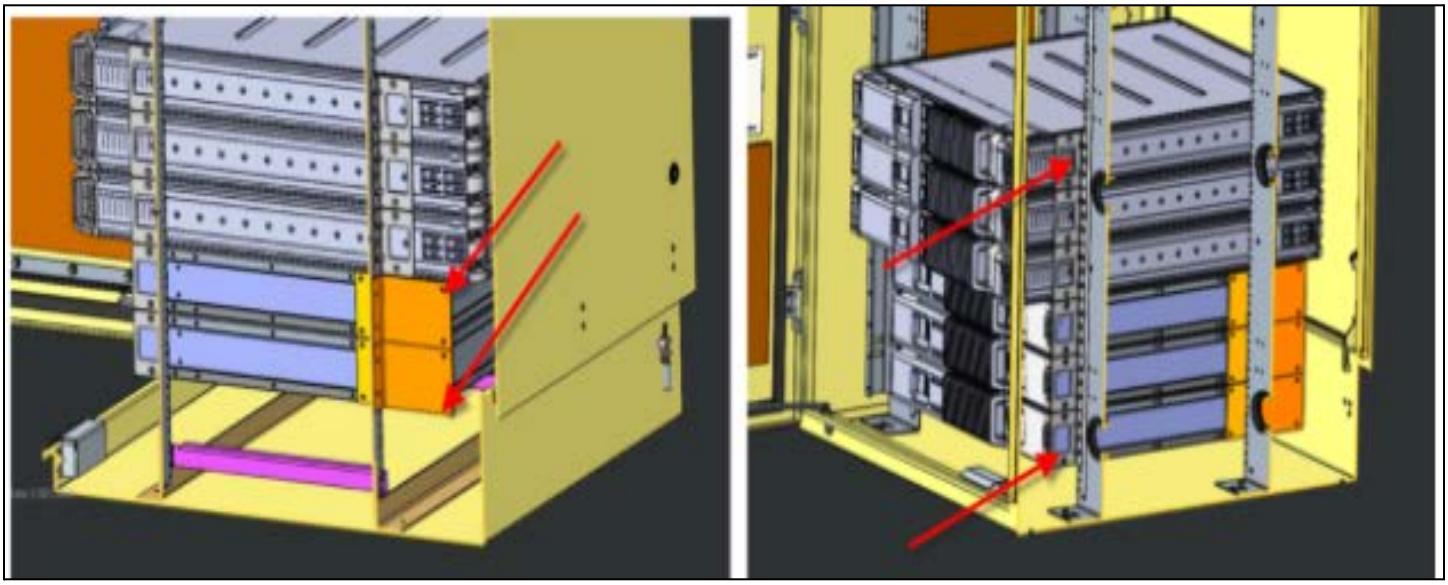

**Example:** Battery Bracket Installation Position - 2




**This document is confidential and privileged to DISH. It is intended solely for use by DISH internal employees and DISH's approved vendors. Any other access or review of this document is prohibited. Any disclosure, copying or distribution, other than to DISH employees, is prohibited without DISH's consent in each instance. Hard copies of this document are not controlled and may not be current. Verify that the hard copy of this document is the most current by matching the revision and revision date to the master located in document storage.**

## 8.3. Battery Unit Spacing

**8.3.1.** There must be ⅔ of an RU spacing (about an 1 ¼”) vertically between each battery unit.

**Example:** Battery Unit Spacing




**This document is confidential and privileged to DISH. It is intended solely for use by DISH internal employees and DISH’s approved vendors. Any other access or review of this document is prohibited. Any disclosure, copying or distribution, other than to DISH employees, is prohibited without DISH’s consent in each instance. Hard copies of this document are not controlled and may not be current. Verify that the hard copy of this document is the most current by matching the revision and revision date to the master located in document storage.**

## 8.4. Battery Cable Routing

**Example:** Battery Cable Routing - 1




**This document is confidential and privileged to DISH. It is intended solely for use by DISH internal employees and DISH's approved vendors. Any other access or review of this document is prohibited. Any disclosure, copying or distribution, other than to DISH employees, is prohibited without DISH's consent in each instance. Hard copies of this document are not controlled and may not be current. Verify that the hard copy of this document is the most current by matching the revision and revision date to the master located in document storage.**

**Example:** Battery Cable Routing - 2

## 8.5. Battery Communication Cables

**8.5.1.** Insert termination plug in bottom battery unit.

**8.5.2.** Interconnect the battery units with provided communication cables.

**8.5.3.** Top battery unit communication cable connects to the SiteBoss RS-485 terminal.

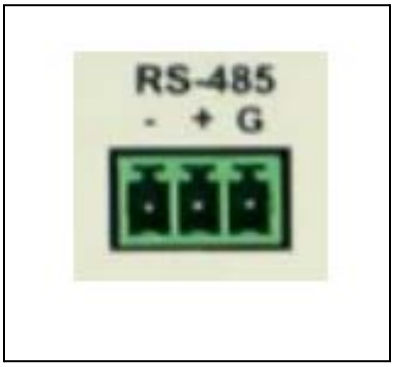


**Example:** SiteBoss RS-485 terminal




**This document is confidential and privileged to DISH. It is intended solely for use by DISH internal employees and DISH's approved vendors. Any other access or review of this document is prohibited. Any disclosure, copying or distribution, other than to DISH employees, is prohibited without DISH's consent in each instance. Hard copies of this document are not controlled and may not be current. Verify that the hard copy of this document is the most current by matching the revision and revision date to the master located in document storage.**

**Example:** Battery Communication Cables

## 8.6. SiteBoss Cable Termination

**8.6.1.** A white CAT-5 cable is provided with every site. One end of the cable is pre terminated with an RJ-45 connector. The other end of the cable must be terminated to the RS-485 connector.




**This document is confidential and privileged to DISH. It is intended solely for use by DISH internal employees and DISH's approved vendors. Any other access or review of this document is prohibited. Any disclosure, copying or distribution, other than to DISH employees, is prohibited without DISH's consent in each instance. Hard copies of this document are not controlled and may not be current. Verify that the hard copy of this document is the most current by matching the revision and revision date to the master located in document storage.**

**Example:** White CAT-5 Cable

**8.6.2.** Check the pinout of the RJ-45 connector, specifically pin #6. Pin #6 will dictate if the connector is wired as a T-568A (orange insulation) or a T-568B (green insulation).

8.6.2.1. T-568-A.

8.6.2.2. White/Blue (Negative).

8.6.2.3. Blue (Positive).

8.6.2.4. Orange (Ground).

8.6.2.5. T-568-B

8.6.2.6. White/Blue (Negative)

8.6.2.7. Blue (Positive)

8.6.2.8. Green (Ground)

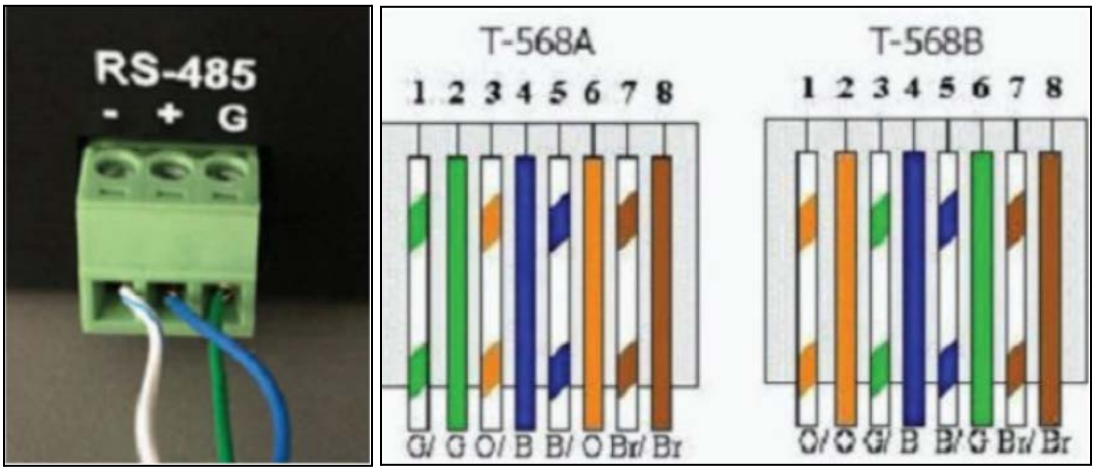


**Example:** SiteBoss Cable Termination




**This document is confidential and privileged to DISH. It is intended solely for use by DISH internal employees and DISH's approved vendors. Any other access or review of this document is prohibited. Any disclosure, copying or distribution, other than to DISH employees, is prohibited without DISH's consent in each instance. Hard copies of this document are not controlled and may not be current. Verify that the hard copy of this document is the most current by matching the revision and revision date to the master located in document storage.**

## 8.7. Cable Weatherseal

**8.7.1.** Install weatherseal boots over the RJ-45 ports and route all CAT-5 cables through the gland.

**Example:** Cable Weatherseal - 1




**This document is confidential and privileged to DISH. It is intended solely for use by DISH internal employees and DISH's approved vendors. Any other access or review of this document is prohibited. Any disclosure, copying or distribution, other than to DISH employees, is prohibited without DISH's consent in each instance. Hard copies of this document are not controlled and may not be current. Verify that the hard copy of this document is the most current by matching the revision and revision date to the master located in document storage.**

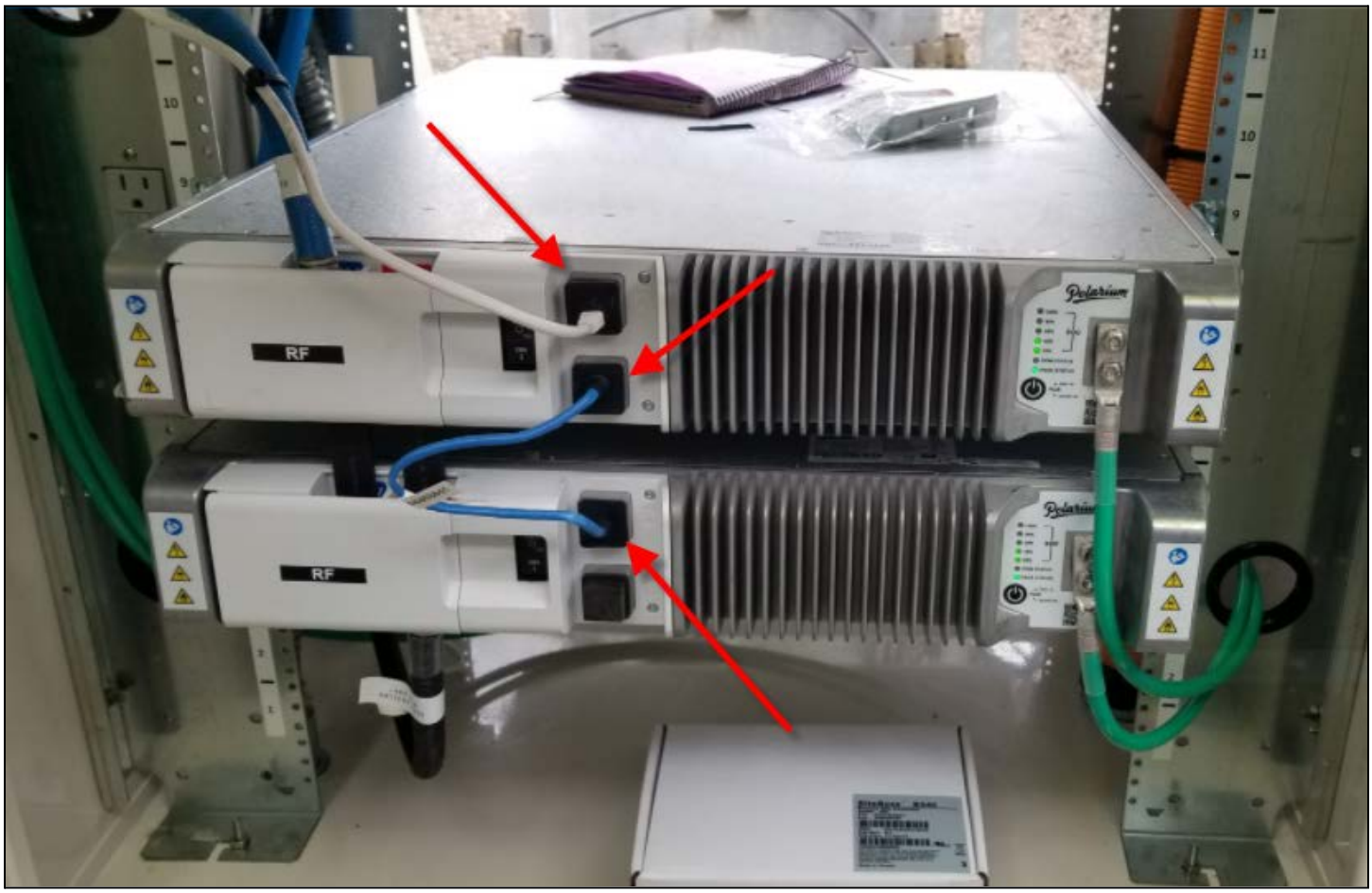


**Example:** Cable Weatherseal - 2

## 8.8. Battery Bracket Hardware

**8.8.1.** All hardware should be provided with the battery brackets.

**8.8.2.** Use replacement part, M5x8 (0.80 pitch) P/no. 403149-A if screws are lost.

**Example:** Replacement Battery Hardware




**This document is confidential and privileged to DISH. It is intended solely for use by DISH internal employees and DISH's approved vendors. Any other access or review of this document is prohibited. Any disclosure, copying or distribution, other than to DISH employees, is prohibited without DISH's consent in each instance. Hard copies of this document are not controlled and may not be current. Verify that the hard copy of this document is the most current by matching the revision and revision date to the master located in document storage.**

**Note:** Any deviation from the above practices must be approved by the local DISH construction team. Should you have any questions or concerns regarding the tasks outlined in this document, please contact your DISH CM.

# 9. TOWER

## 9.1. National Standard for Antenna Positions

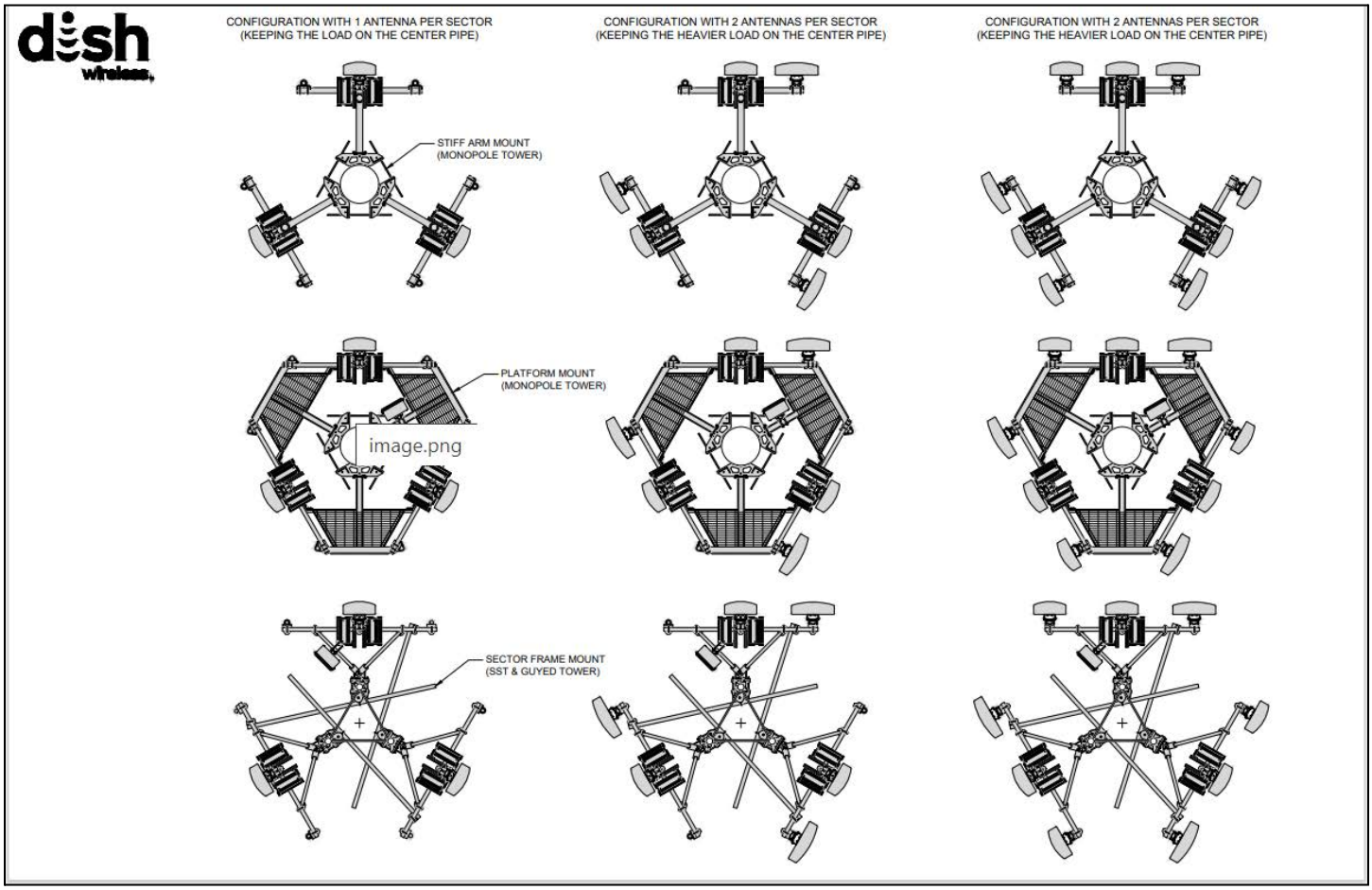


**Example:** Antenna Positions




**This document is confidential and privileged to DISH. It is intended solely for use by DISH internal employees and DISH's approved vendors. Any other access or review of this document is prohibited. Any disclosure, copying or distribution, other than to DISH employees, is prohibited without DISH's consent in each instance. Hard copies of this document are not controlled and may not be current. Verify that the hard copy of this document is the most current by matching the revision and revision date to the master located in document storage.**

## 9.2. Sector Ground Bars

**9.2.1.** Install isolators on each sector bus bar.

**9.2.2.** Install ground leads from each sector bar to the main tower top collector bar (non-isolated).

**9.2.3.** Utilize position #2 (center) for antenna and RRH installation (exception for monopole platforms where placing the RRHs in position #2 could cause obstruction).

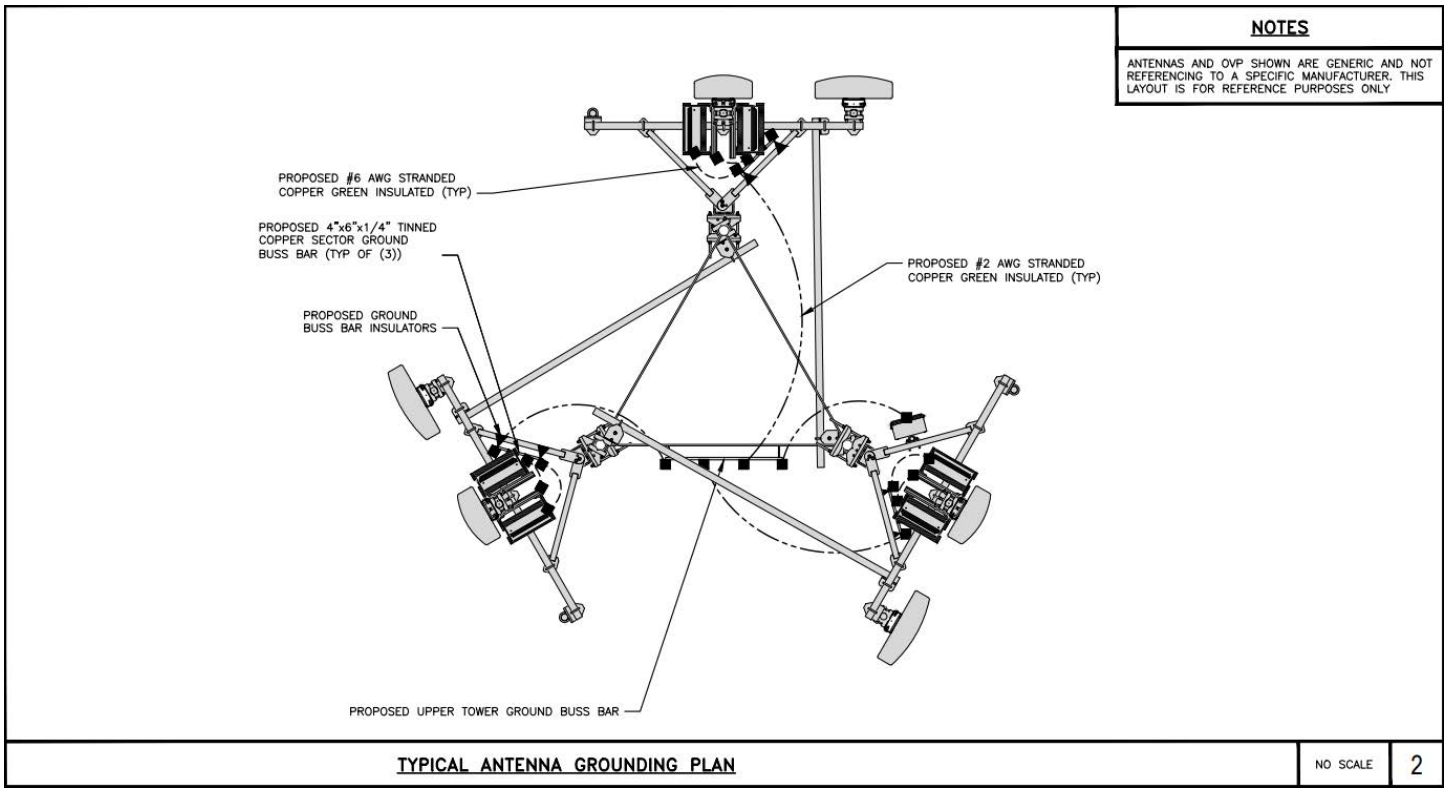


**Example:** Typical Antenna Grounding Plan




**This document is confidential and privileged to DISH. It is intended solely for use by DISH internal employees and DISH's approved vendors. Any other access or review of this document is prohibited. Any disclosure, copying or distribution, other than to DISH employees, is prohibited without DISH's consent in each instance. Hard copies of this document are not controlled and may not be current. Verify that the hard copy of this document is the most current by matching the revision and revision date to the master located in document storage.**

**9.2.4.** Utilize position #2 (center) for antenna and RRH installation (exception for monopole platforms where placing the RRHs in position #2 could cause obstruction).

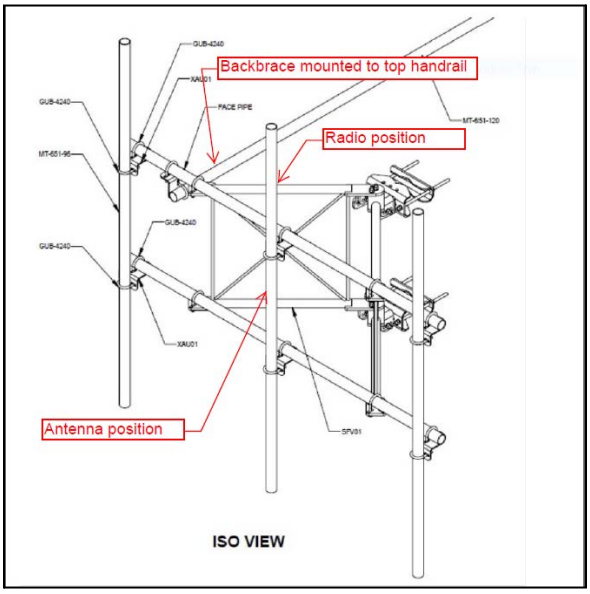


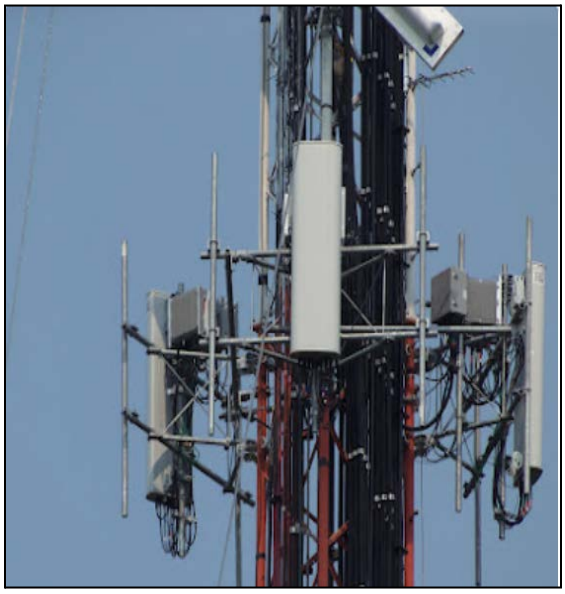

**Example:** Radio/Antenna Position




**This document is confidential and privileged to DISH. It is intended solely for use by DISH internal employees and DISH's approved vendors. Any other access or review of this document is prohibited. Any disclosure, copying or distribution, other than to DISH employees, is prohibited without DISH's consent in each instance. Hard copies of this document are not controlled and may not be current. Verify that the hard copy of this document is the most current by matching the revision and revision date to the master located in document storage.**

**Example:** Radio mounting position above the handrail




**This document is confidential and privileged to DISH. It is intended solely for use by DISH internal employees and DISH's approved vendors. Any other access or review of this document is prohibited. Any disclosure, copying or distribution, other than to DISH employees, is prohibited without DISH's consent in each instance. Hard copies of this document are not controlled and may not be current. Verify that the hard copy of this document is the most current by matching the revision and revision date to the master located in document storage.**

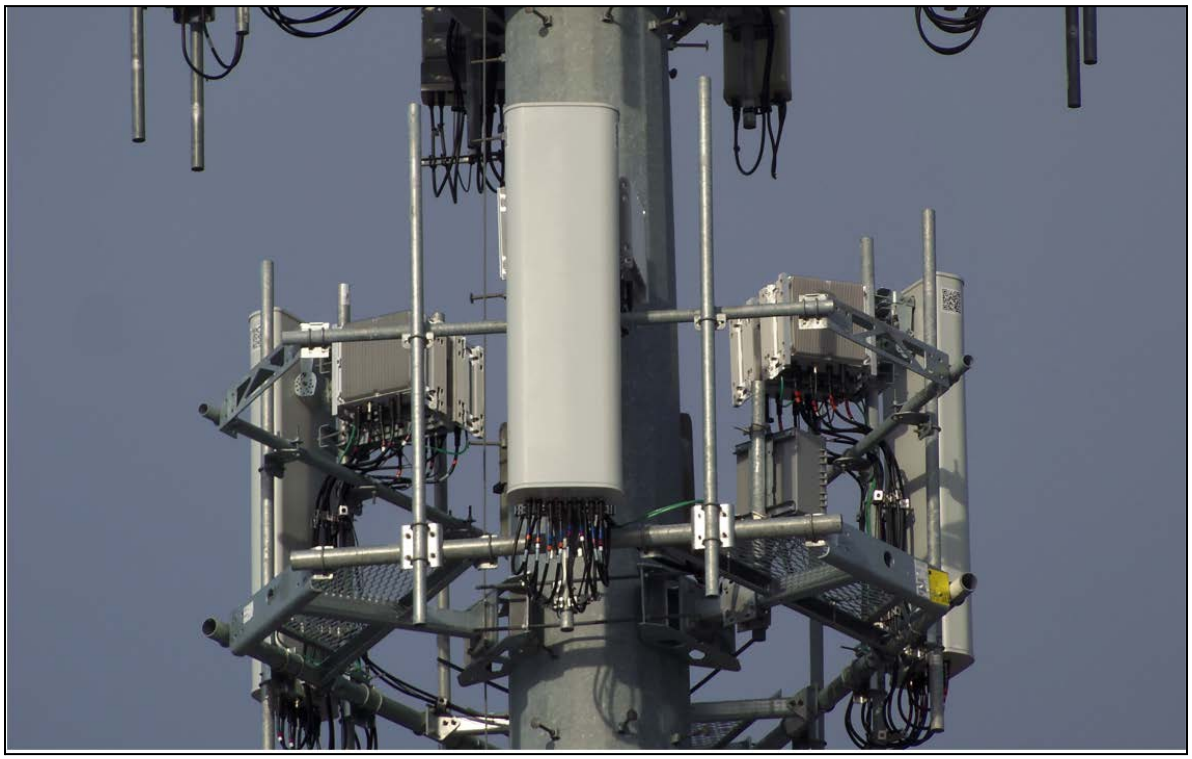

**Example:** Antenna and RRHs mounted in position #2 on a monopole platform

**Example:** Quality antenna and RRH port termination photos




**This document is confidential and privileged to DISH. It is intended solely for use by DISH internal employees and DISH's approved vendors. Any other access or review of this document is prohibited. Any disclosure, copying or distribution, other than to DISH employees, is prohibited without DISH's consent in each instance. Hard copies of this document are not controlled and may not be current. Verify that the hard copy of this document is the most current by matching the revision and revision date to the master located in document storage.**

**Note:** Images should clearly show color-code and port assignment.

## 9.3. Plumbing Diagram - RRHs to JMA Antenna

**9.3.1.** Plumbing diagrams will vary based on antenna manufacturer and antenna type

**9.3.2.** Each RRH will have a RET cable interfacing with the antenna AISG ports. Daisy chaining RET cables are not permitted at this time.



**This document is confidential and privileged to DISH. It is intended solely for use by DISH internal employees and DISH's approved vendors. Any other access or review of this document is prohibited. Any disclosure, copying or distribution, other than to DISH employees, is prohibited without DISH's consent in each instance. Hard copies of this document are not controlled and may not be current. Verify that the hard copy of this document is the most current by matching the revision and revision date to the master located in document storage.**

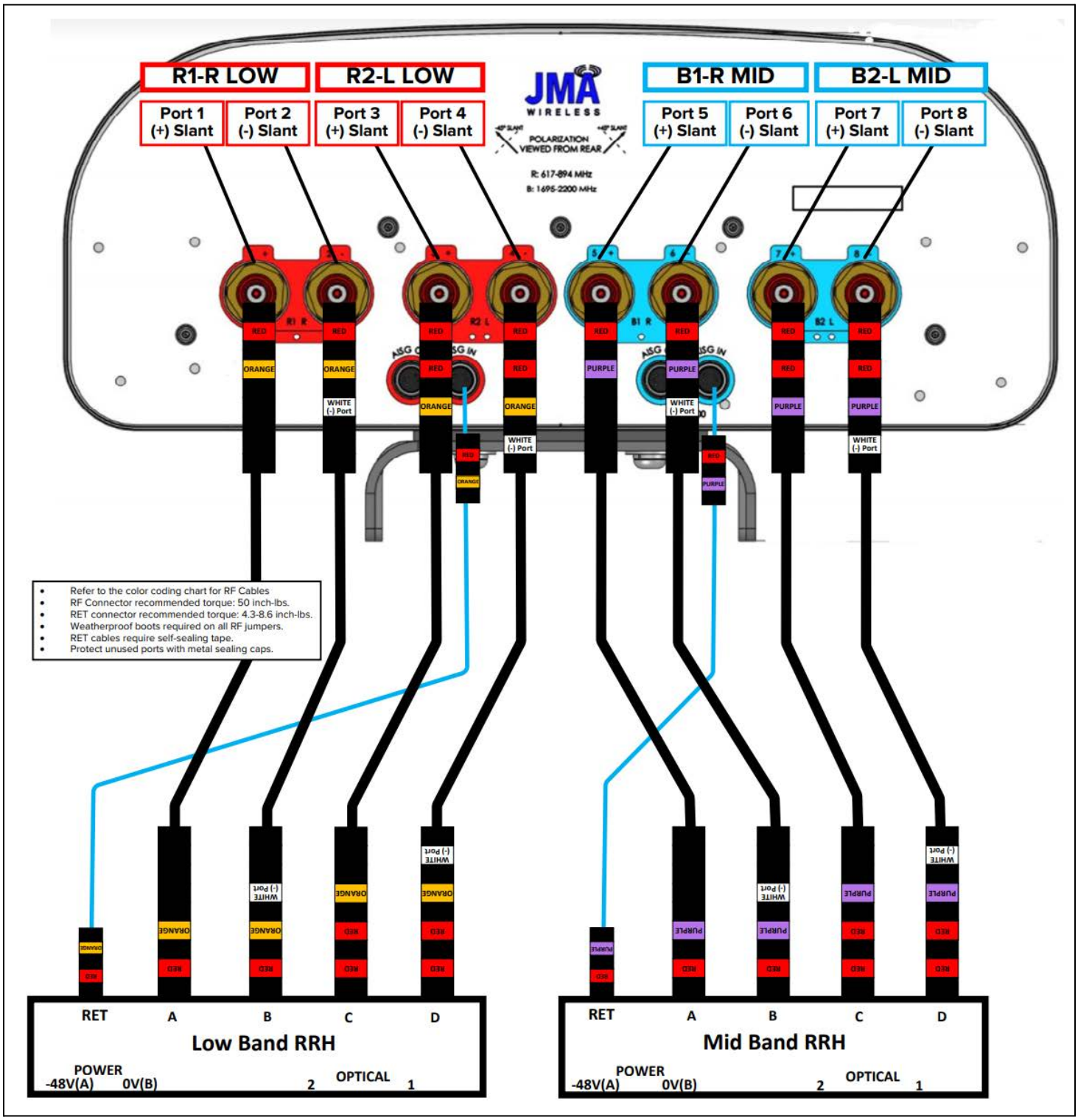


**Example:** Plumbing diagram from the RRHs to a JMA antenna




**This document is confidential and privileged to DISH. It is intended solely for use by DISH internal employees and DISH's approved vendors. Any other access or review of this document is prohibited. Any disclosure, copying or distribution, other than to DISH employees, is prohibited without DISH's consent in each instance. Hard copies of this document are not controlled and may not be current. Verify that the hard copy of this document is the most current by matching the revision and revision date to the master located in document storage.**

## 9.4. Plumbing Fiber

**9.4.1.** The below diagrams illustrate the fiber, power and RET terminations between the RRHs and the server for a site with no power booster.

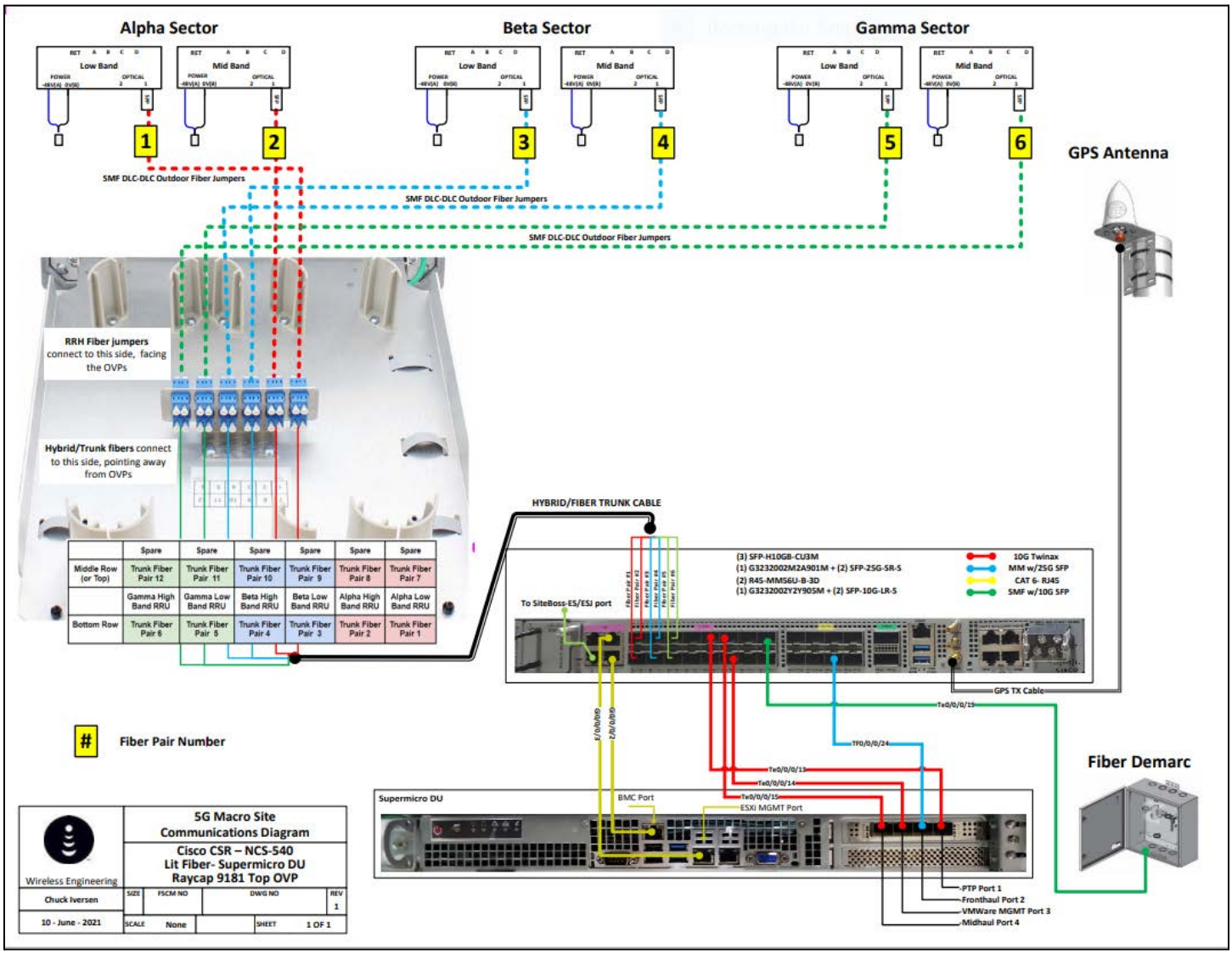


**Example:** Plumbing Fiber




**This document is confidential and privileged to DISH. It is intended solely for use by DISH internal employees and DISH's approved vendors. Any other access or review of this document is prohibited. Any disclosure, copying or distribution, other than to DISH employees, is prohibited without DISH's consent in each instance. Hard copies of this document are not controlled and may not be current. Verify that the hard copy of this document is the most current by matching the revision and revision date to the master located in document storage.**

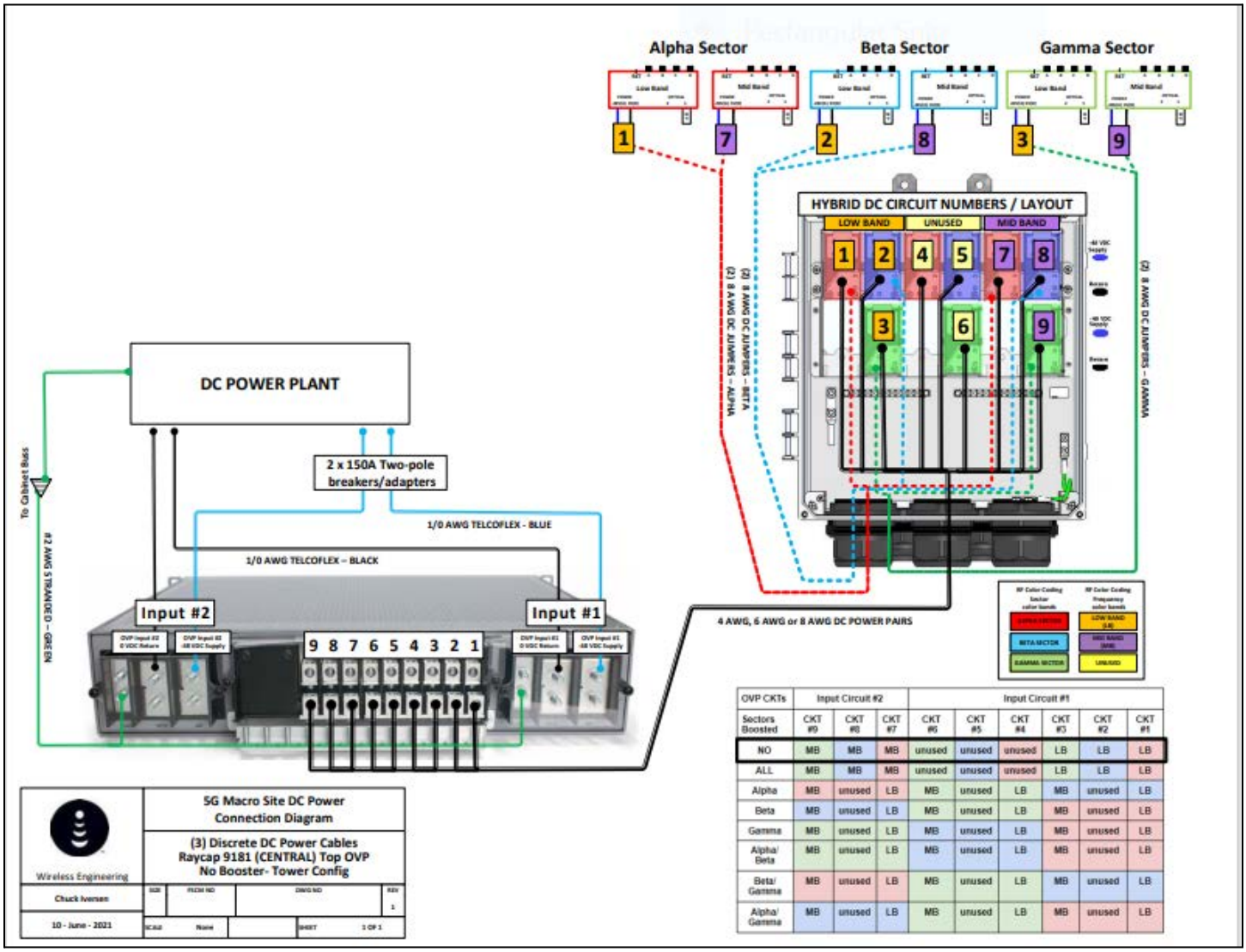


| OVP CKTs | Input Circuit #2 | | | Input Circuit #1 | | | | | |
|---|---|---|---|---|---|---|---|---|---|
| Sectors Boosted | CKT #9 | CKT #8 | CKT #7 | CKT #6 | CKT #5 | CKT #4 | CKT #3 | CKT #2 | CKT #1 |
| NO | MB | MB | MB | unused | unused | unused | LB | LB | LB |
| ALL | MB | MB | MB | unused | unused | unused | LB | LB | LB |
| Alpha | MB | unused | LB | MB | unused | LB | MB | unused | LB |
| Beta | MB | unused | LB | MB | unused | LB | MB | unused | LB |
| Gamma | MB | unused | LB | MB | unused | LB | MB | unused | LB |
| Alpha/ Beta | MB | unused | LB | MB | unused | LB | MB | unused | LB |
| Beta/ Gamma | MB | unused | LB | MB | unused | LB | MB | unused | LB |
| Alpha/ Gamma | MB | unused | LB | MB | unused | LB | MB | unused | LB |

**Example:** Plumbing DC Power




**This document is confidential and privileged to DISH. It is intended solely for use by DISH internal employees and DISH's approved vendors. Any other access or review of this document is prohibited. Any disclosure, copying or distribution, other than to DISH employees, is prohibited without DISH's consent in each instance. Hard copies of this document are not controlled and may not be current. Verify that the hard copy of this document is the most current by matching the revision and revision date to the master located in document storage.**

## 9.5. Power Booster

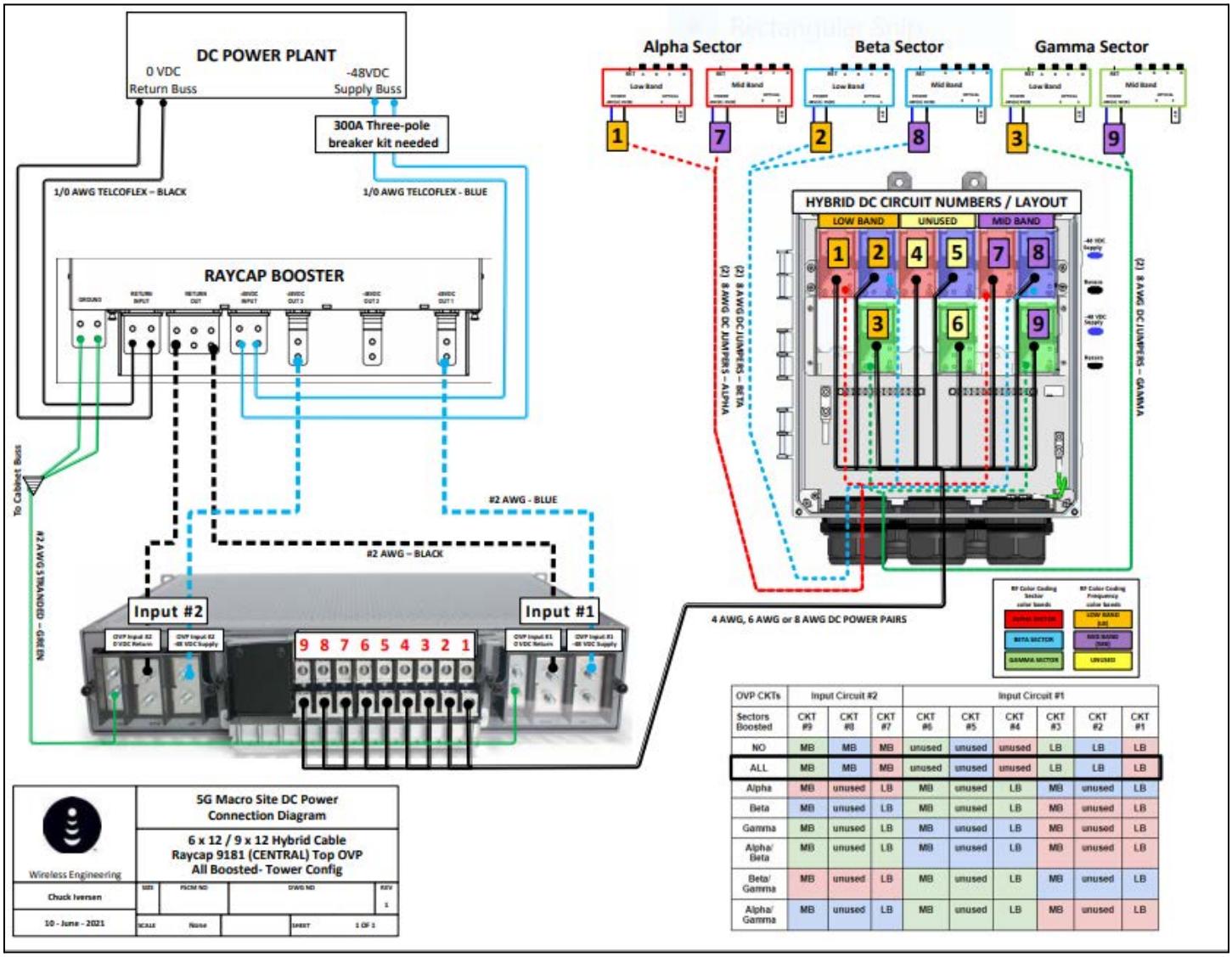


| OVP CKTs | Input Circuit #2 | | | Input Circuit #1 | | | | | |
|---|---|---|---|---|---|---|---|---|---|
| Sectors Boosted | CKT #9 | CKT #8 | CKT #7 | CKT #6 | CKT #5 | CKT #4 | CKT #3 | CKT #2 | CKT #1 |
| NO | MB | MB | MB | unused | unused | unused | LB | LB | LB |
| ALL | MB | MB | MB | unused | unused | unused | LB | LB | LB |
| Alpha | MB | unused | LB | MB | unused | LB | MB | unused | LB |
| Beta | MB | unused | LB | MB | unused | LB | MB | unused | LB |
| Gamma | MB | unused | LB | MB | unused | LB | MB | unused | LB |
| Alpha/ Beta | MB | unused | LB | MB | unused | LB | MB | unused | LB |
| Beta/ Gamma | MB | unused | LB | MB | unused | LB | MB | unused | LB |
| Alpha/ Gamma | MB | unused | LB | MB | unused | LB | MB | unused | LB |

**Example:** Power Terminations between RRHs and Power Shelf for Site with Power Booster




**This document is confidential and privileged to DISH. It is intended solely for use by DISH internal employees and DISH's approved vendors. Any other access or review of this document is prohibited. Any disclosure, copying or distribution, other than to DISH employees, is prohibited without DISH's consent in each instance. Hard copies of this document are not controlled and may not be current. Verify that the hard copy of this document is the most current by matching the revision and revision date to the master located in document storage.**

## 9.6. RRH Fiber Color-Code Tower Top OVP

**9.6.1.** Alpha low-band - Red/Orange

**9.6.2.** Alpha mid-band - Red/Purple

**9.6.3.** Beta low-band - Blue/Orange

**9.6.4.** Beta mid-band - Blue/Purple

**9.6.5.** Gamma low-band - Green/Orange

**9.6.6.** Gamma mid-band - Green/Purple

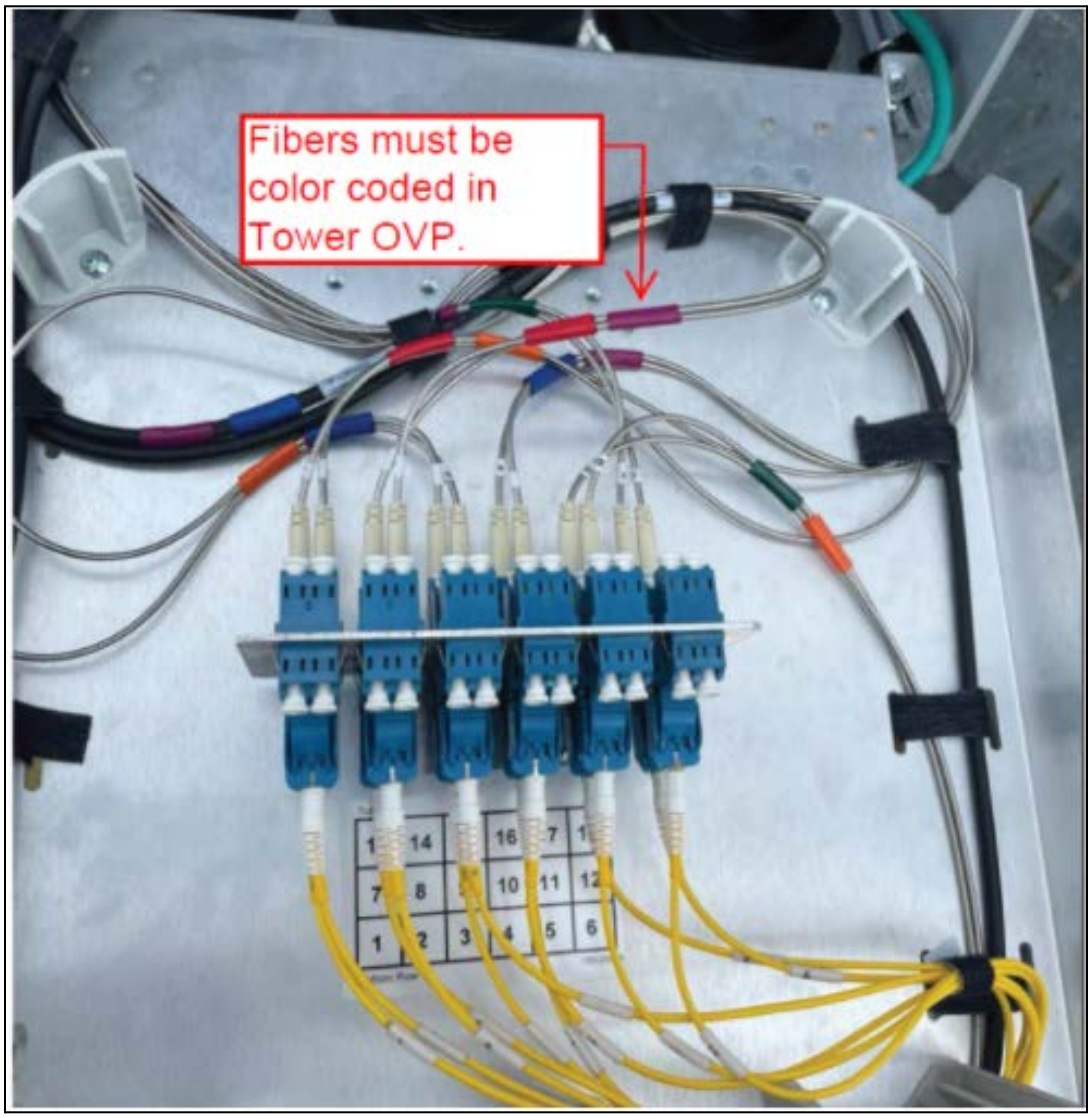


**Example:** RRH fiber color-code tower top OVP




**This document is confidential and privileged to DISH. It is intended solely for use by DISH internal employees and DISH's approved vendors. Any other access or review of this document is prohibited. Any disclosure, copying or distribution, other than to DISH employees, is prohibited without DISH's consent in each instance. Hard copies of this document are not controlled and may not be current. Verify that the hard copy of this document is the most current by matching the revision and revision date to the master located in document storage.**

## 9.7. Power Wires and Fibers in Tower OVP

### 9.7.1. Color Coding

9.7.1.1. Cables must be color coded.

9.7.1.2. Apply colored tape, rather than 145 tags, to the power wires for ease of verification.

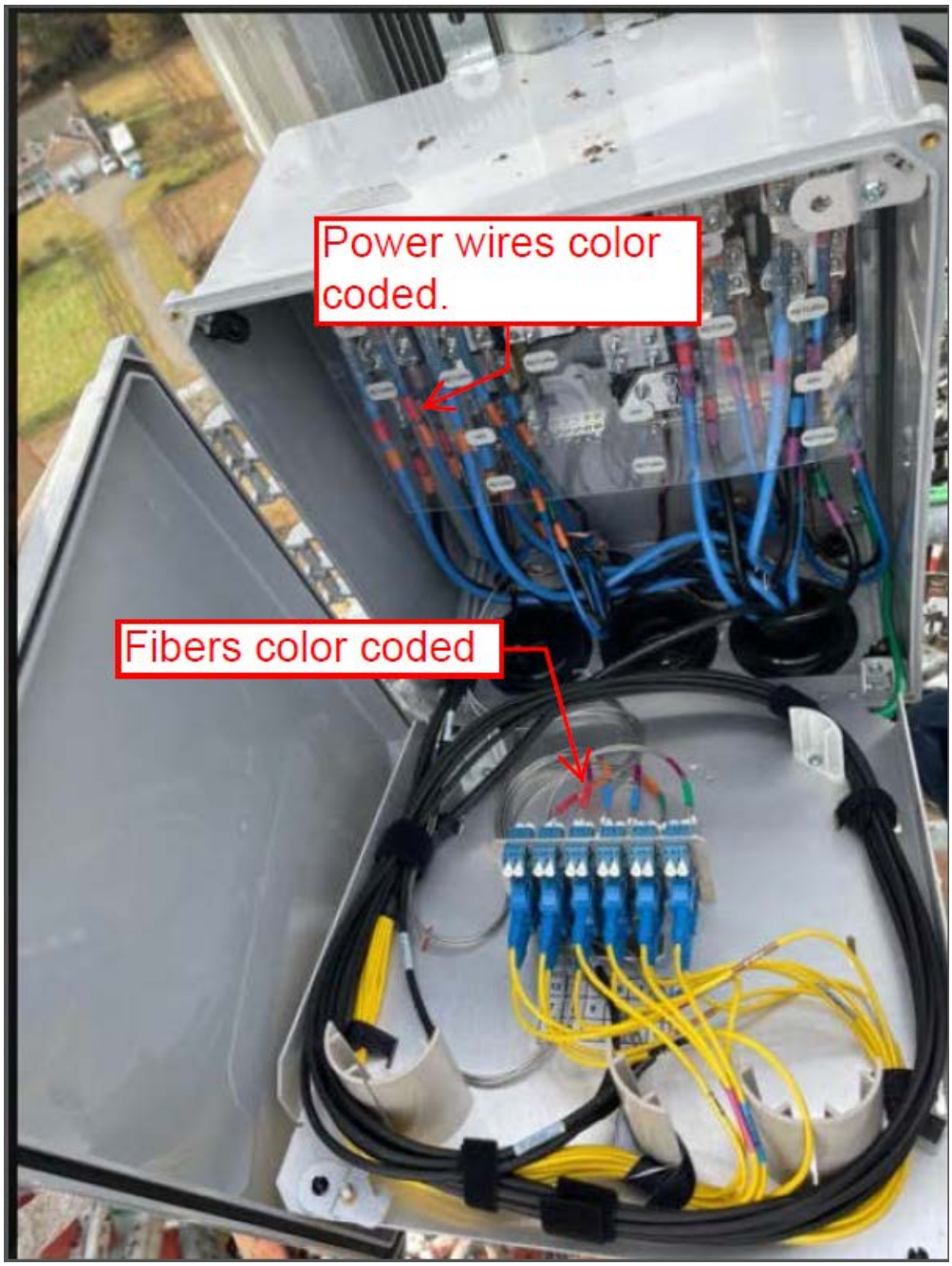


**Example:** Color coded wires and fibers




**This document is confidential and privileged to DISH. It is intended solely for use by DISH internal employees and DISH's approved vendors. Any other access or review of this document is prohibited. Any disclosure, copying or distribution, other than to DISH employees, is prohibited without DISH's consent in each instance. Hard copies of this document are not controlled and may not be current. Verify that the hard copy of this document is the most current by matching the revision and revision date to the master located in document storage.**

## 9.8. Antenna RET

### 9.8.1. RET Naming Convention

| Field | Field length (Characters) | Description |
|---|---|---|
| AOI | 3 | Use characters 3 through 5 of the DISH site ID to populate this field. (DISH site ID: DCWDC00425A - AOI: XXX) |
| SITE # | 5 | Use characters 6 through 10 of the DISH site ID to populate this field. (DISH site ID: DCWDC00425A - SITE #: XXXXX) |
| - | 1 | Dash separates AOI and Site # from Sector, Antenna Postion, RET Actuator and Technology. |
| Sector | 1 | Field indicates the sector the antenna is installed on A=Alpha B=Beta G=Gamma |
| Antenna Position | 1 | Field indicates the location of the antenna on the sector frame/platform |
| RET Actuator | 1 | Some antennas have multiple RET motors. Field indicates which RET motor is being manipulated. |
| Technology | 1 | Field indicates which technology is associated to the RET actuator. L=Low-band M= Mid-band C=CBRS |
| | | **RET ID Example:** WDC00425-A21M |

### 9.8.2. RET naming example (Each sector)

9.8.2.1. Enter the 11 digit site ID into the base station field

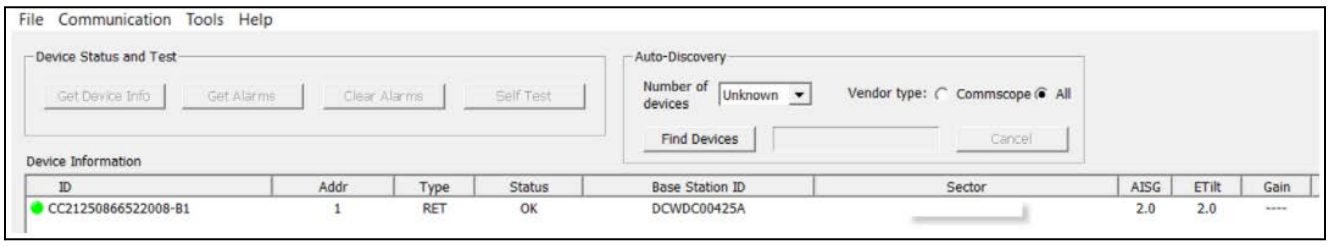





**This document is confidential and privileged to DISH. It is intended solely for use by DISH internal employees and DISH's approved vendors. Any other access or review of this document is prohibited. Any disclosure, copying or distribution, other than to DISH employees, is prohibited without DISH's consent in each instance. Hard copies of this document are not controlled and may not be current. Verify that the hard copy of this document is the most current by matching the revision and revision date to the master located in document storage.**

## 9.9. Actuator ID

### 9.9.1. Alpha

9.9.1.1. WDC00425-A21L

9.9.1.2. WDC00425-A21M

### 9.9.2. Beta

9.9.2.1. WDC00425-B21L

9.9.2.2. WDC00425-B21M

### 9.9.3. Gamma

9.9.3.1. WDC00425-G21L

9.9.3.2. WDC00425-G21M

## 9.10. Radio Labeling

**9.10.1.** P-Touch label installed by GC.

**9.10.2.** Picture must show the P-Touch label.

**9.10.3.** Serial # and SFP Image uploaded in N1.

**Example:** Radio Label

## 9.11. RRH Fiber Termination Assignments

**9.11.1.** Fiber #1 - CSR port #4 - Alpha low/tri-band RRH

**9.11.2.** Fiber #2 - CSR port #5 - Alpha mid/dual-band RRH

**9.11.3.** Fiber #3 - CSR port #6 - Beta low/tri-band RRH

**9.11.4.** FIber #4 - CSR port #7 - Beta mid/dual-band RRH




**This document is confidential and privileged to DISH. It is intended solely for use by DISH internal employees and DISH's approved vendors. Any other access or review of this document is prohibited. Any disclosure, copying or distribution, other than to DISH employees, is prohibited without DISH's consent in each instance. Hard copies of this document are not controlled and may not be current. Verify that the hard copy of this document is the most current by matching the revision and revision date to the master located in document storage.**

**9.11.5.** Fiber #5 - CSR port #8 - Gamma low/tri-band RRH

**9.11.6.** Fiber #6 - CSR port#9 - Gamma mid/dual-band RRH

## 9.12. RRH Power Termination Assignments

**9.12.1.** Raycap breaker #1 - Alpha low/tri-band RRH

**9.12.2.** Raycap breaker #2 - Beta low/tri-band RRH

**9.12.3.** Raycap breaker #3 - Gamma low/tri-band RRH

**9.12.4.** Raycap breaker #7 - Alpha mid/dual-band RRH

**9.12.5.** Raycap breaker #8 - Beta mid/dual-band RRH

**9.12.6.** Raycap breaker #9 - Gamma mid/dual-band RRH

## 9.13. Hybrid

### 9.13.1. Fiber Number to CSR Ports

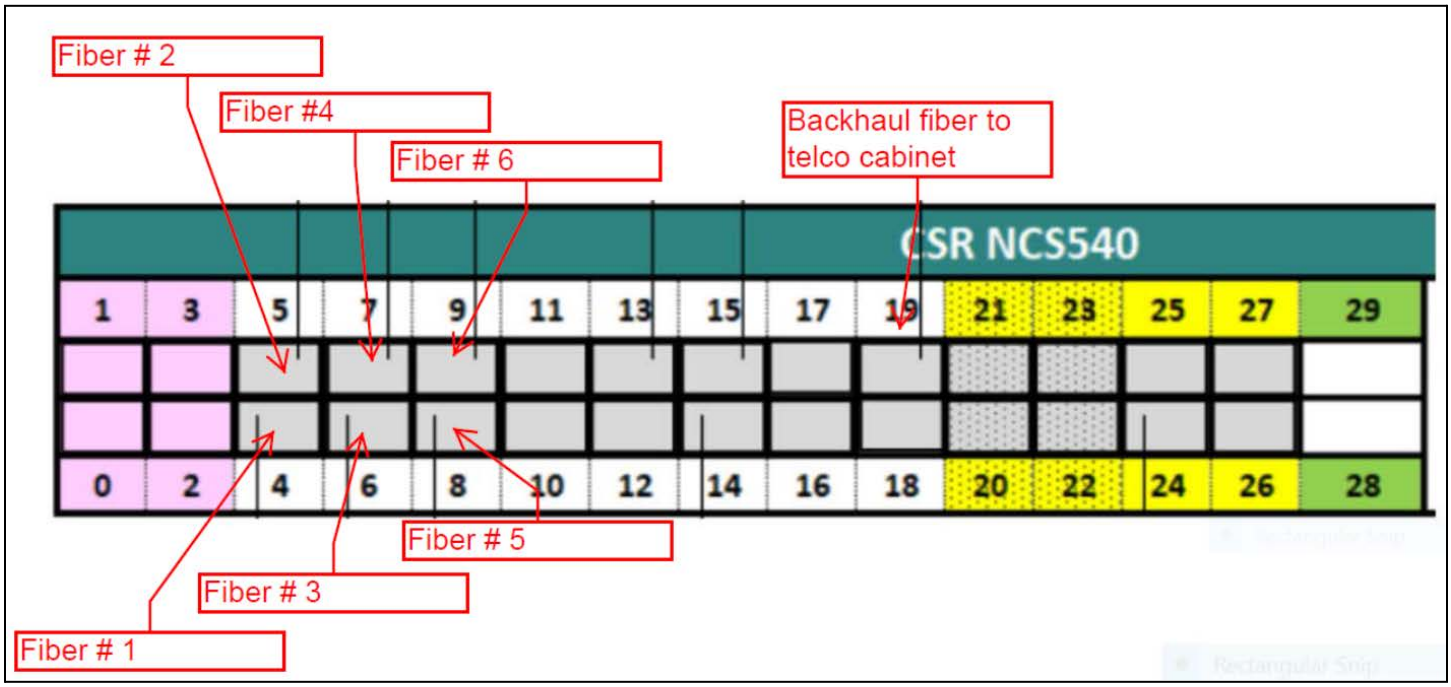


**Example:** Fiber #'s to CSR Ports




**This document is confidential and privileged to DISH. It is intended solely for use by DISH internal employees and DISH's approved vendors. Any other access or review of this document is prohibited. Any disclosure, copying or distribution, other than to DISH employees, is prohibited without DISH's consent in each instance. Hard copies of this document are not controlled and may not be current. Verify that the hard copy of this document is the most current by matching the revision and revision date to the master located in document storage.**

### 9.13.2. Hybrid Cable Fiber Routing to CSR

9.13.2.1. Route fibers the CSR from the front left side of the cabinet.

9.13.2.2. Use velcro to secure the fiber to the cable support bar (No zip ties on fiber).

9.13.2.3. Do not route fibers through Panduit, as this could result in broken fibers.

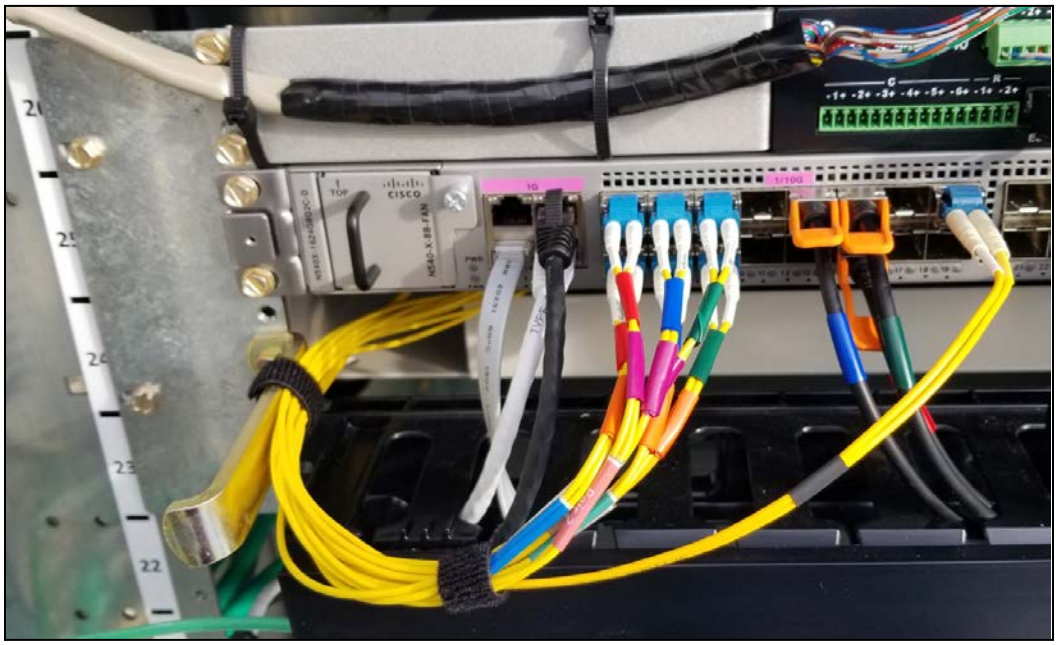

**Example:** Hybrid Cable Fiber Routing to CSR




**This document is confidential and privileged to DISH. It is intended solely for use by DISH internal employees and DISH's approved vendors. Any other access or review of this document is prohibited. Any disclosure, copying or distribution, other than to DISH employees, is prohibited without DISH's consent in each instance. Hard copies of this document are not controlled and may not be current. Verify that the hard copy of this document is the most current by matching the revision and revision date to the master located in document storage.**

### 9.13.3. RRH Fiber Color-Code Labeling at CSR

9.13.3.1. Alpha low-band - Red/Orange

9.13.3.2. Alpha mid-band - Red/Purple

9.13.3.3. Beta low-band - Blue/Orange

9.13.3.4. Beta mid-band - Blue/Purple

9.13.3.5. Gamma low-band - Green/Orange

9.13.3.6. Gamma mid-band -Green/Purple

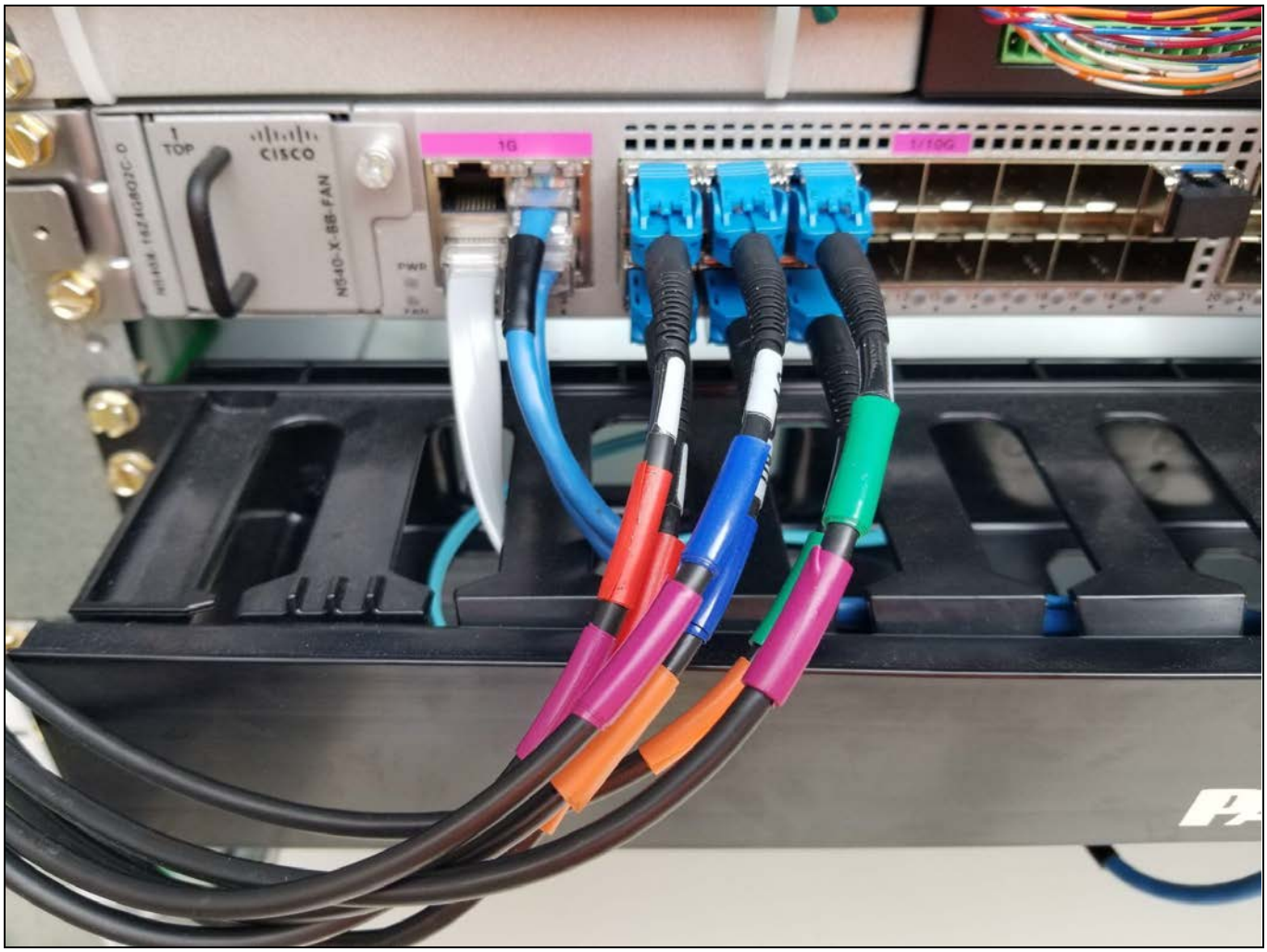


**Example:** RRH Fiber Color-Code Labeling at CSR




**This document is confidential and privileged to DISH. It is intended solely for use by DISH internal employees and DISH's approved vendors. Any other access or review of this document is prohibited. Any disclosure, copying or distribution, other than to DISH employees, is prohibited without DISH's consent in each instance. Hard copies of this document are not controlled and may not be current. Verify that the hard copy of this document is the most current by matching the revision and revision date to the master located in document storage.**

### 9.13.4. Power Wire Color-Code at Rack Mounted OVP

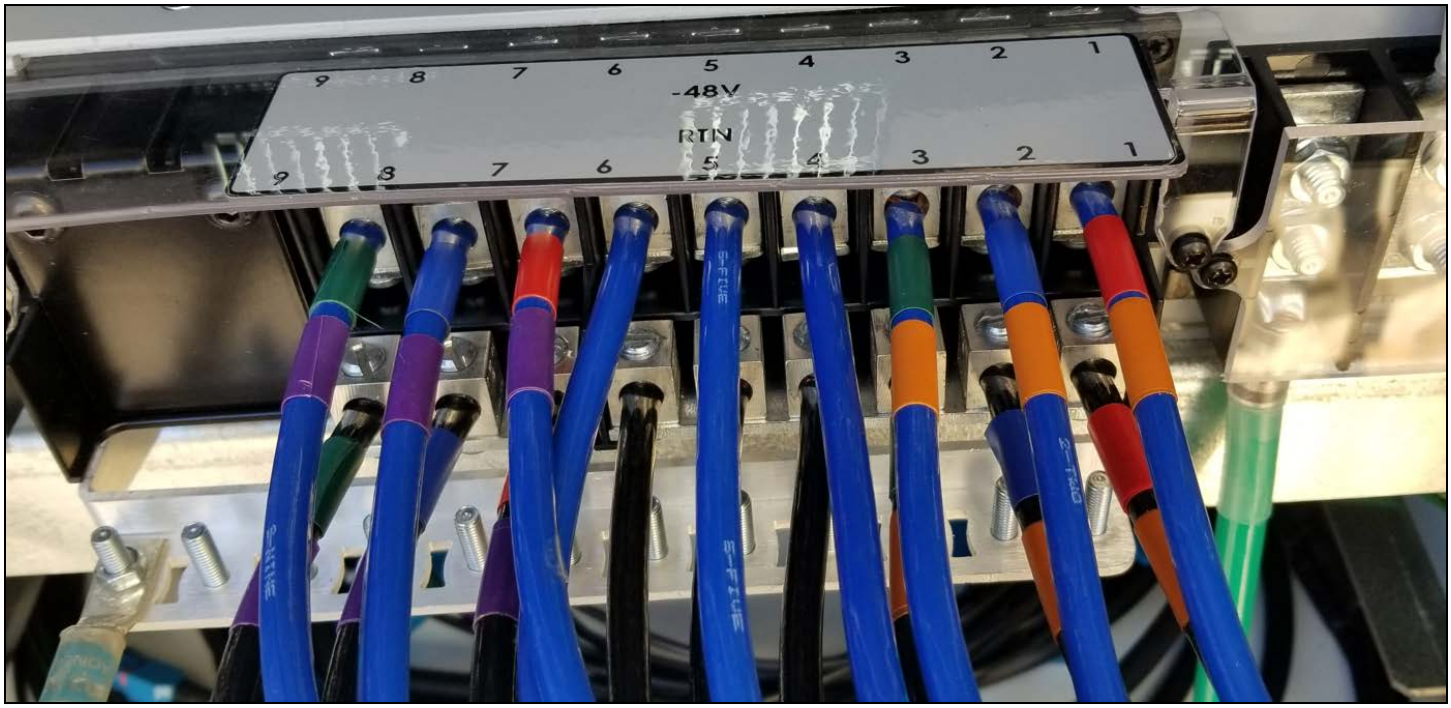


**Example:** Power Wire Color-Code at Rack Mounted OVP

### 9.13.5. Hybrid Cable Ground Termination

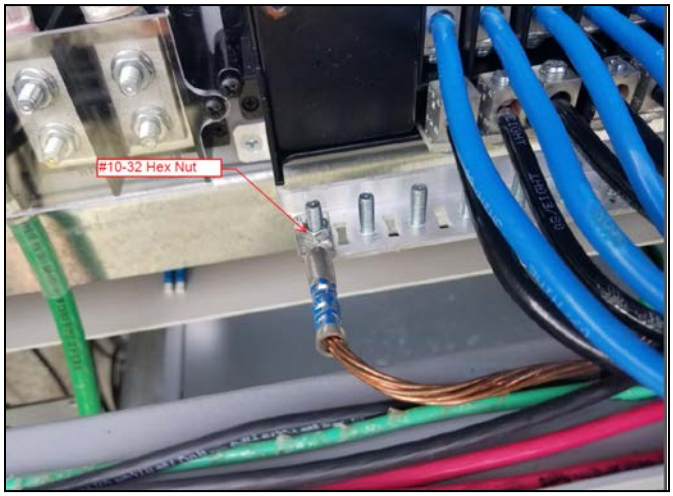

**Example:** Hybrid Cable Ground Termination

## 9.14. OVP Cabinet Breaker Labeling

### 9.14.1. Sector RRH band (low band or high band)




**This document is confidential and privileged to DISH. It is intended solely for use by DISH internal employees and DISH's approved vendors. Any other access or review of this document is prohibited. Any disclosure, copying or distribution, other than to DISH employees, is prohibited without DISH's consent in each instance. Hard copies of this document are not controlled and may not be current. Verify that the hard copy of this document is the most current by matching the revision and revision date to the master located in document storage.**

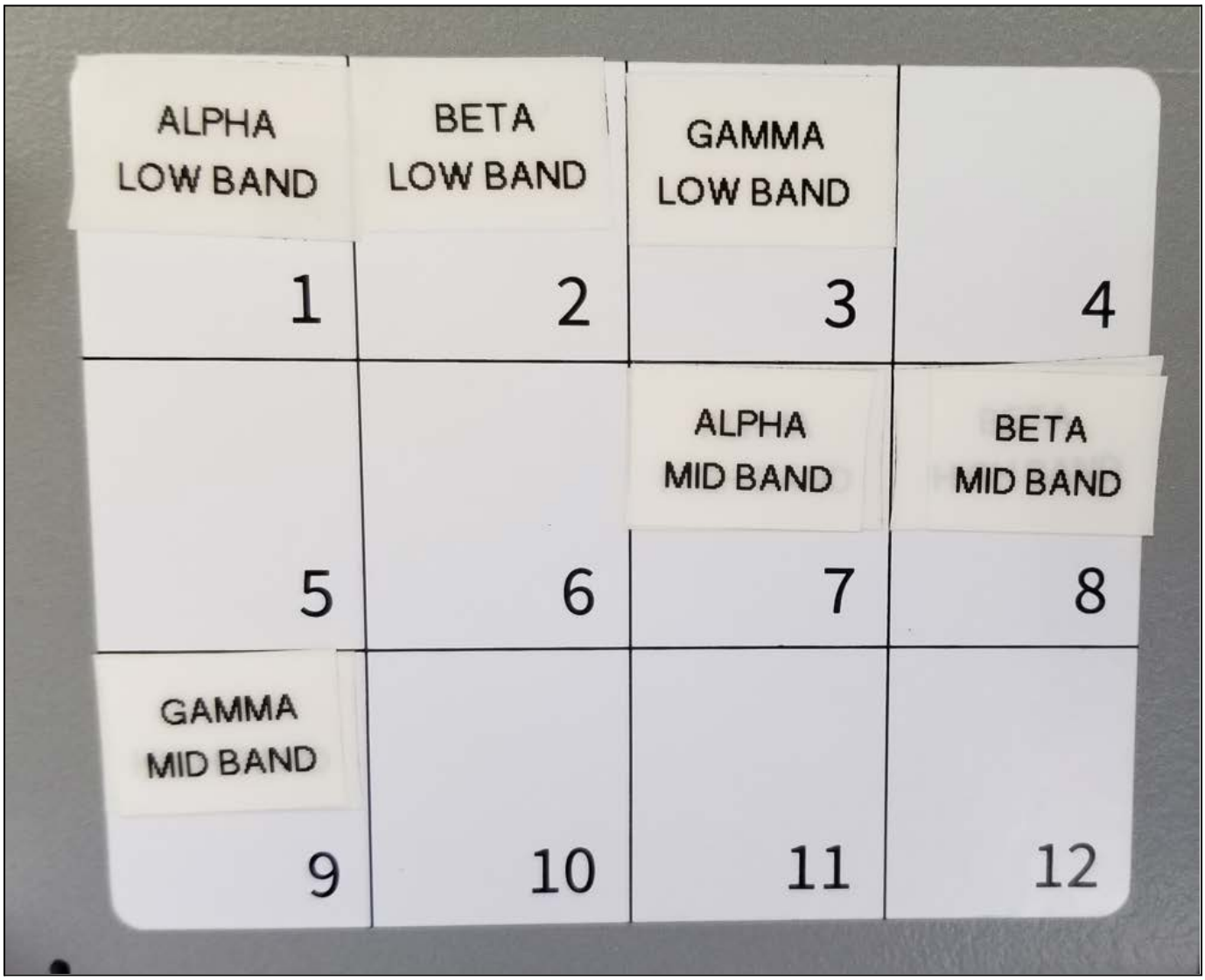


**Example:** OVP Cabinet Breaker Labeling




**This document is confidential and privileged to DISH. It is intended solely for use by DISH internal employees and DISH's approved vendors. Any other access or review of this document is prohibited. Any disclosure, copying or distribution, other than to DISH employees, is prohibited without DISH's consent in each instance. Hard copies of this document are not controlled and may not be current. Verify that the hard copy of this document is the most current by matching the revision and revision date to the master located in document storage.**

## 9.15. RF Jumper Color-Code

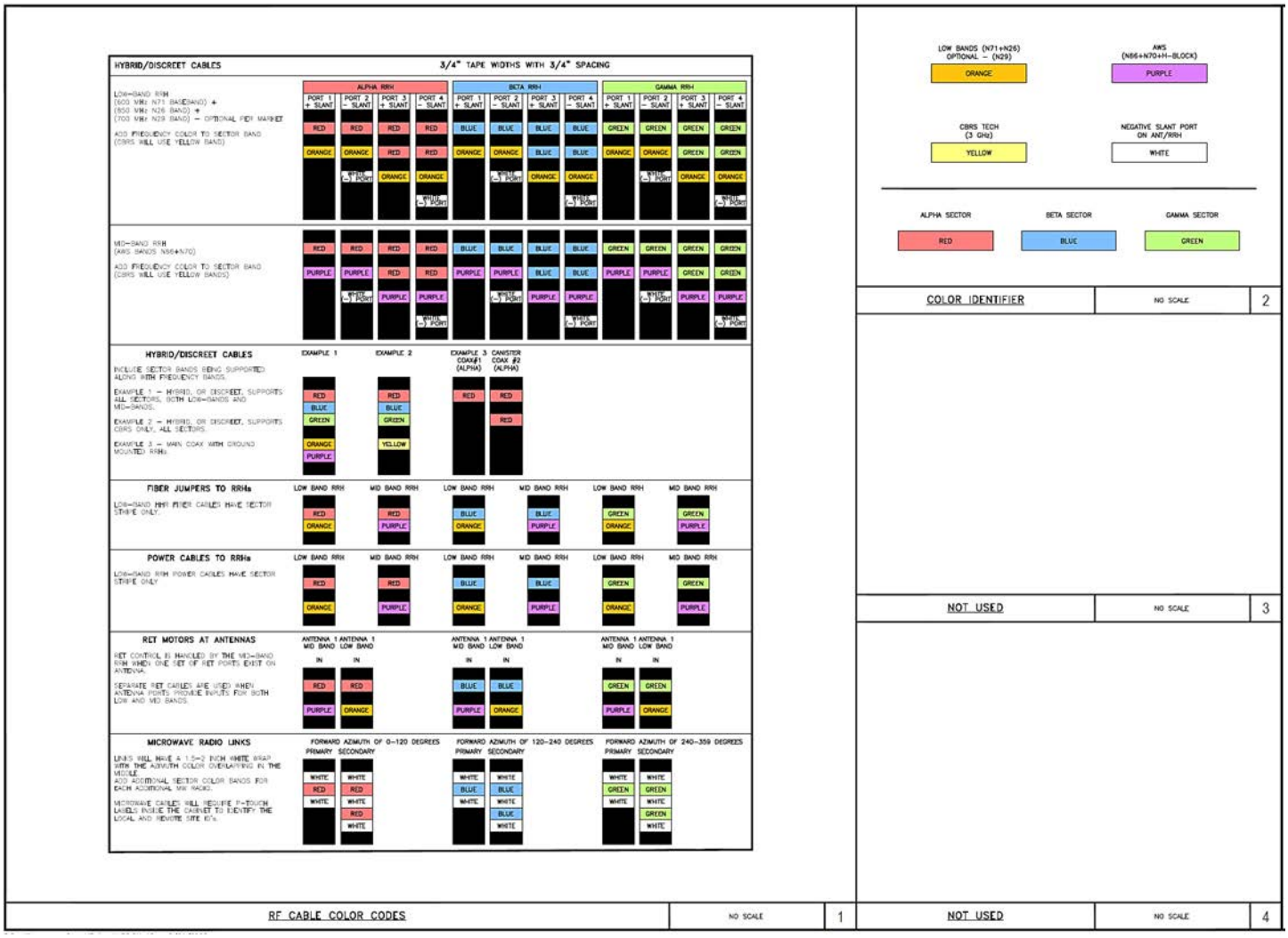


**Example**: RF Jumper Color-Code

## 9.16. Hybrid and Conduit Cabinet Entry Points

**9.16.1.** Hybrid cable must have a drip loop in line before entering the cabinet.

**9.16.2.** Reducing washers must be installed inside and outside of the entry port if an incorrect knockout is used.

**9.16.3.** Hybrid entries are to be caulked using SCS30 or equivalent outdoor rated caulk.

**9.16.4.** Coupler to hybrid cable to be taped using SIL 15 or equivalent silicone tape.

**Example:** Hybrid and Conduit Cabinet Entry Points - 1




**This document is confidential and privileged to DISH. It is intended solely for use by DISH internal employees and DISH's approved vendors. Any other access or review of this document is prohibited. Any disclosure, copying or distribution, other than to DISH employees, is prohibited without DISH's consent in each instance. Hard copies of this document are not controlled and may not be current. Verify that the hard copy of this document is the most current by matching the revision and revision date to the master located in document storage.**

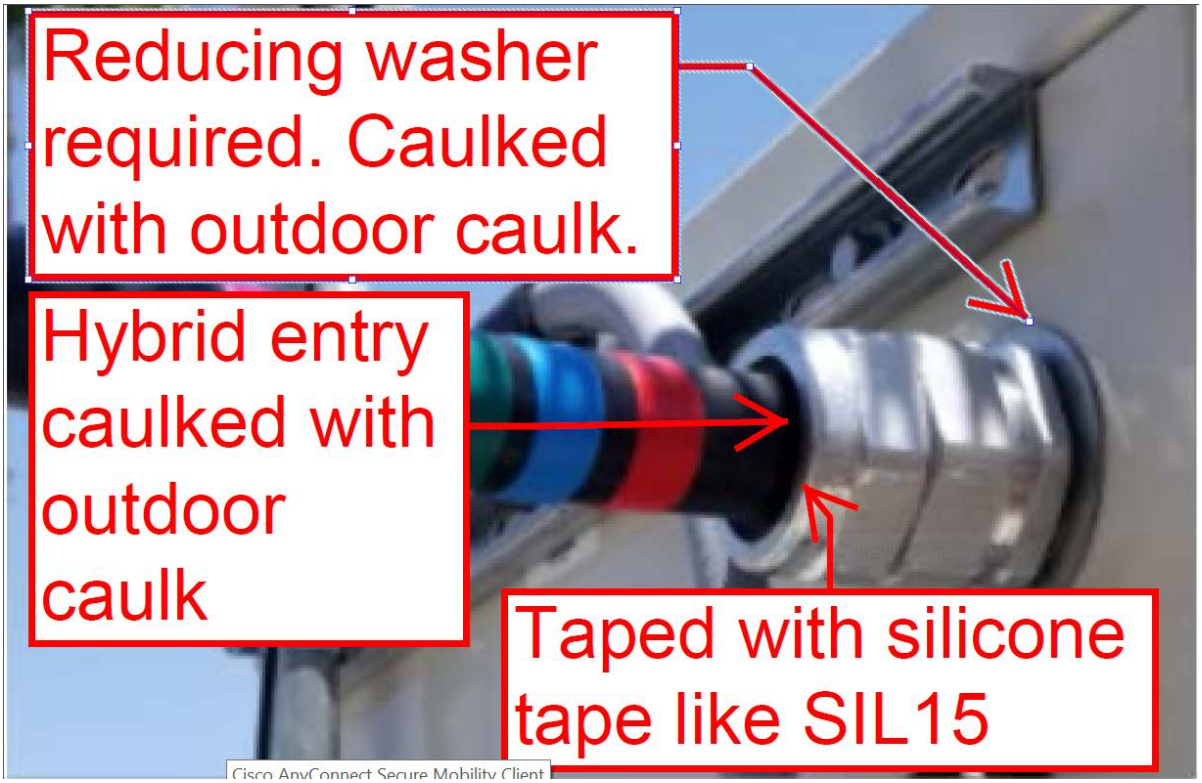


**Example:** Hybrid and Conduit Cabinet Entry Points - 2

**Example:** SIL 15 or equivalent silicone tape




**This document is confidential and privileged to DISH. It is intended solely for use by DISH internal employees and DISH's approved vendors. Any other access or review of this document is prohibited. Any disclosure, copying or distribution, other than to DISH employees, is prohibited without DISH's consent in each instance. Hard copies of this document are not controlled and may not be current. Verify that the hard copy of this document is the most current by matching the revision and revision date to the master located in document storage.**

## 9.17. GPS Cabinet Entry Point

**9.17.1.** The barrel of the GPS surge arrester must be mounted outside the cabinet.

**9.17.2.** The surge arrester must make contact with bare metal (remove paint coating from cabinet entry point before installation of surge arrester).

**9.17.3.** Apply anti-oxidant compound to the area where coating was removed.

**Example:** GPS Cabinet Entry Point

**9.17.4.** For Great Lakes Cabinet use reducing washers until a retro-fit kit is available.




**This document is confidential and privileged to DISH. It is intended solely for use by DISH internal employees and DISH's approved vendors. Any other access or review of this document is prohibited. Any disclosure, copying or distribution, other than to DISH employees, is prohibited without DISH's consent in each instance. Hard copies of this document are not controlled and may not be current. Verify that the hard copy of this document is the most current by matching the revision and revision date to the master located in document storage.**

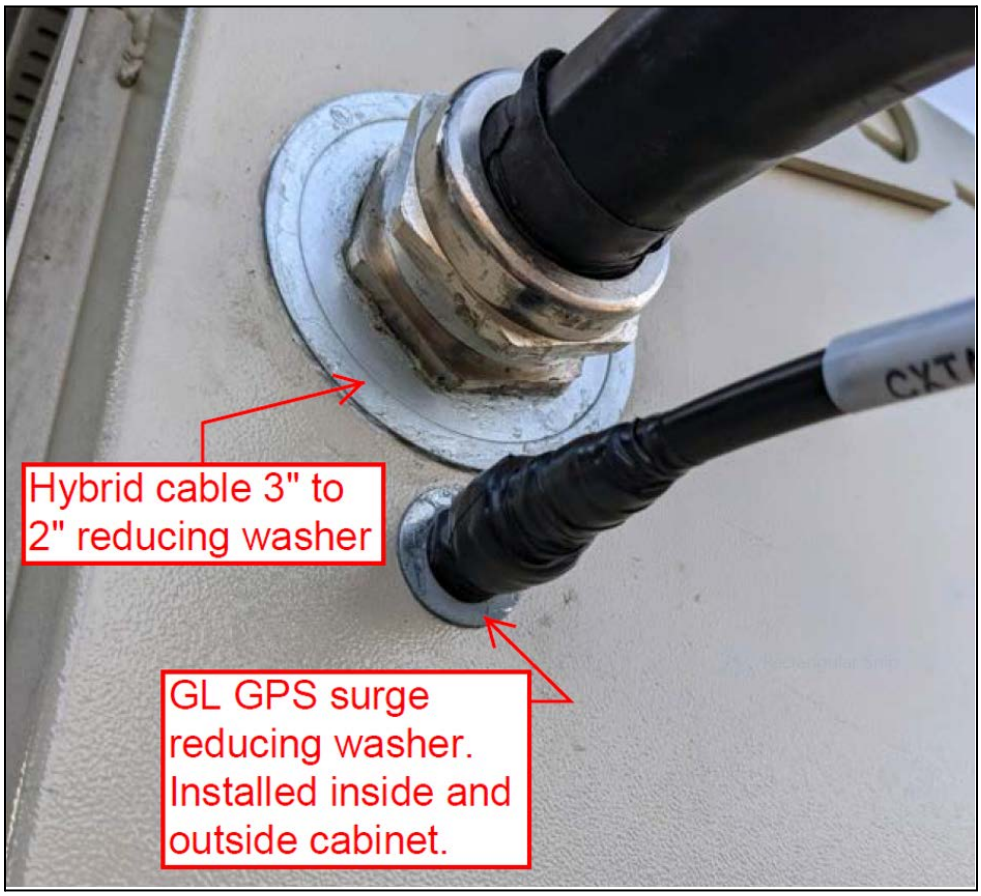


**Example:** Reducing Washers




**This document is confidential and privileged to DISH. It is intended solely for use by DISH internal employees and DISH's approved vendors. Any other access or review of this document is prohibited. Any disclosure, copying or distribution, other than to DISH employees, is prohibited without DISH's consent in each instance. Hard copies of this document are not controlled and may not be current. Verify that the hard copy of this document is the most current by matching the revision and revision date to the master located in document storage.**

## 9.18. GPS Antenna Mount

**9.18.1.** Prefered placement should be on the ice bridge post with a clear 300 degree view of the sky. Install the GPS module as high as possible so as not to be blocked by the pole.

**9.18.2.** Ground to be #6 AWG shielded conductor to the platform bus bar.

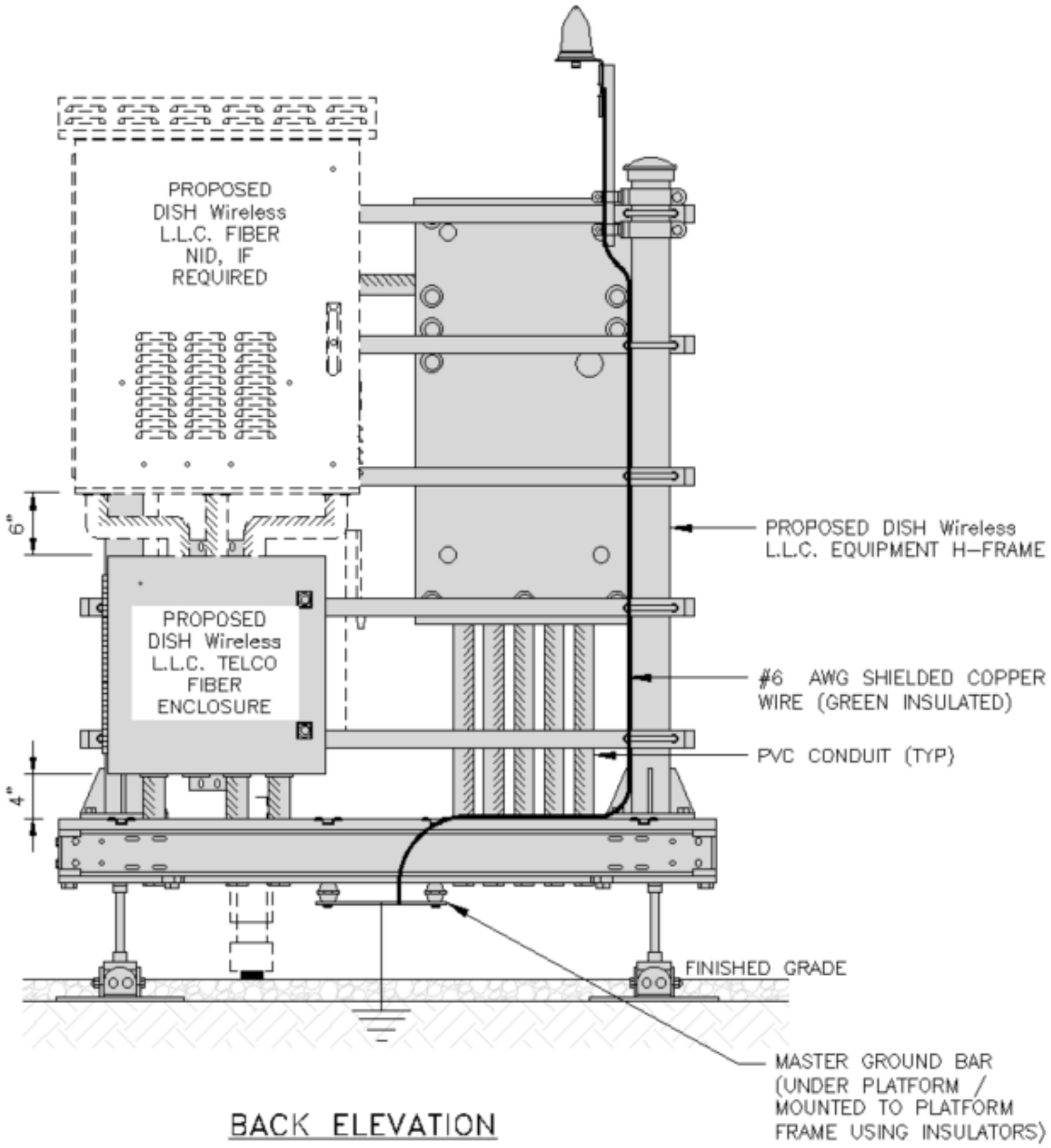


**Example:** GPS Antenna Mount




**This document is confidential and privileged to DISH. It is intended solely for use by DISH internal employees and DISH's approved vendors. Any other access or review of this document is prohibited. Any disclosure, copying or distribution, other than to DISH employees, is prohibited without DISH's consent in each instance. Hard copies of this document are not controlled and may not be current. Verify that the hard copy of this document is the most current by matching the revision and revision date to the master located in document storage.**

## 9.19. GPS Cable

**9.19.1.** Cable slack to be secured under the icebridge post and secured with a market approved support method, as shown below.

**Example:** GPS Cable




**This document is confidential and privileged to DISH. It is intended solely for use by DISH internal employees and DISH's approved vendors. Any other access or review of this document is prohibited. Any disclosure, copying or distribution, other than to DISH employees, is prohibited without DISH's consent in each instance. Hard copies of this document are not controlled and may not be current. Verify that the hard copy of this document is the most current by matching the revision and revision date to the master located in document storage.**

# 10. POWER BOOSTER INSTALLATION

## 10.1. CHARLES AMPHENOL/GREAT LAKES

### 10.1.1. Raycap Power Booster | RU Location

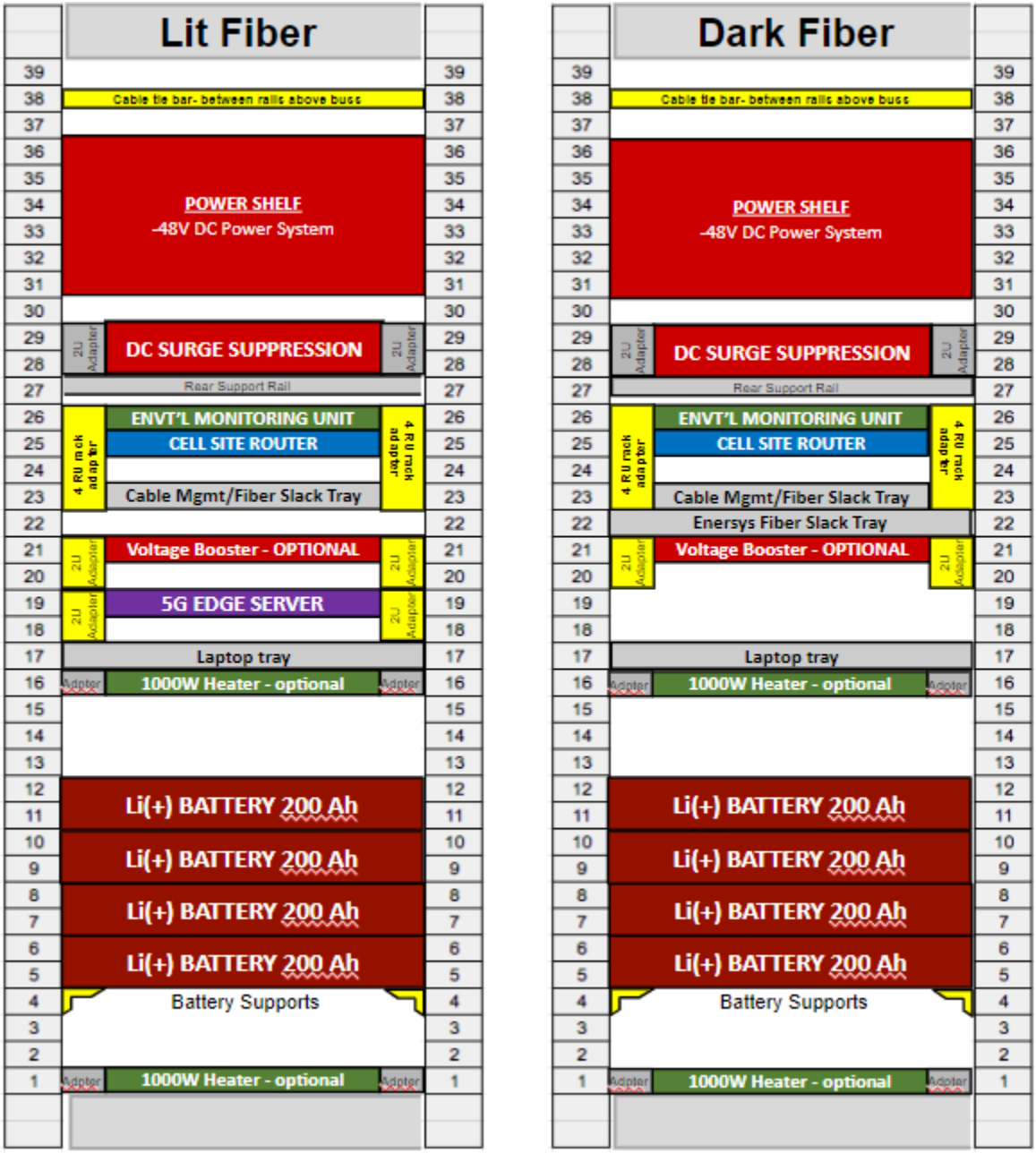


**Example:** RU Elevation Layout




**This document is confidential and privileged to DISH. It is intended solely for use by DISH internal employees and DISH's approved vendors. Any other access or review of this document is prohibited. Any disclosure, copying or distribution, other than to DISH employees, is prohibited without DISH's consent in each instance. Hard copies of this document are not controlled and may not be current. Verify that the hard copy of this document is the most current by matching the revision and revision date to the master located in document storage.**

## 10.2. Power Booster Cabling

**10.2.1.** 3 to 1 bus installed in rectifier shelf terminal positions 13-15 on the -48V rail (not necessary anymore, 150A breakers are sufficient).

**10.2.2.** Land return cables on terminal positions 13 and 15 on the return rail.

**Example:** Power Booster Cabling - 1




**This document is confidential and privileged to DISH. It is intended solely for use by DISH internal employees and DISH's approved vendors. Any other access or review of this document is prohibited. Any disclosure, copying or distribution, other than to DISH employees, is prohibited without DISH's consent in each instance. Hard copies of this document are not controlled and may not be current. Verify that the hard copy of this document is the most current by matching the revision and revision date to the master located in document storage.**

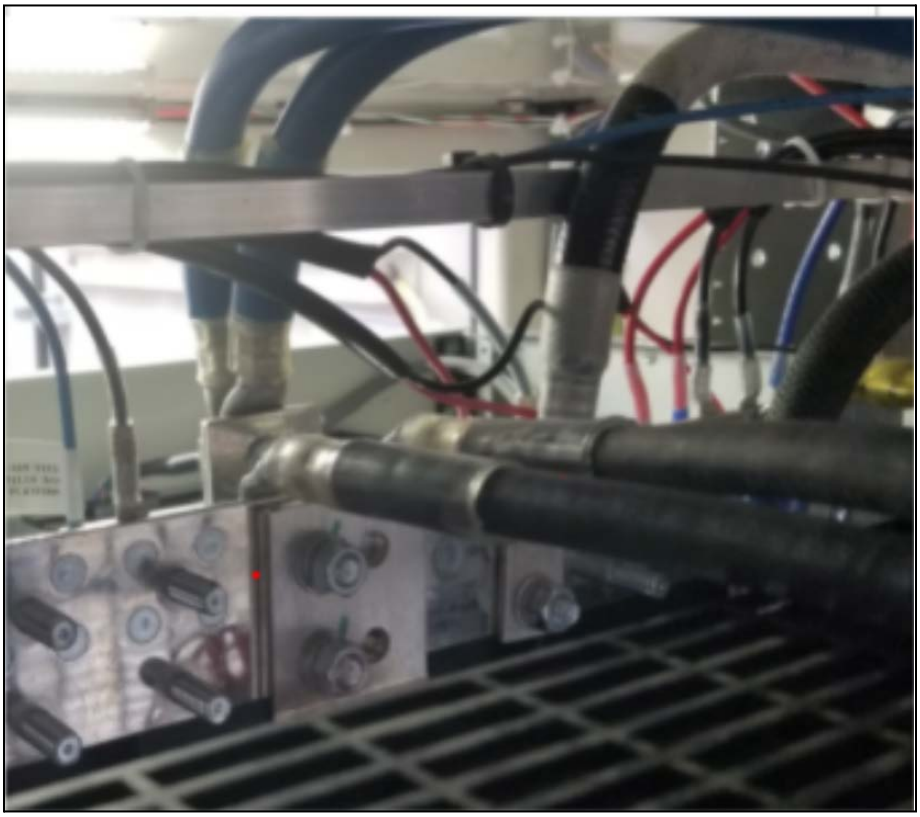

**Example:** Power Booster Cabling - 2

**10.2.3.** Support cable runs as shown in the image below.

**10.2.4.** Cabinet rear door must close without making contact with the cables.




**This document is confidential and privileged to DISH. It is intended solely for use by DISH internal employees and DISH's approved vendors. Any other access or review of this document is prohibited. Any disclosure, copying or distribution, other than to DISH employees, is prohibited without DISH's consent in each instance. Hard copies of this document are not controlled and may not be current. Verify that the hard copy of this document is the most current by matching the revision and revision date to the master located in document storage.**

**Example:** Support Cable

**Example:** Cabinet Rear Door




**This document is confidential and privileged to DISH. It is intended solely for use by DISH internal employees and DISH's approved vendors. Any other access or review of this document is prohibited. Any disclosure, copying or distribution, other than to DISH employees, is prohibited without DISH's consent in each instance. Hard copies of this document are not controlled and may not be current. Verify that the hard copy of this document is the most current by matching the revision and revision date to the master located in document storage.**

### 10.3. Raycap Power Booster Cable Part Numbers

**10.3.1.** For a site with 1 sector boosted, select the RDIDC-100-3R-1U-1, which should come with one set of the following cables.

**10.3.2.** For sites with 2-3 sectors boosted, select the RDIDC-100-3R-1U-2, which should come with 2 sets of the cables below..

| | |
|---|---|
| - 1/0 L4 TelcoFlex RHH Wire - Blue cloth braided | DN015612 |
| - 1/0 L4 TelcoFlex RHH Wire - Black cloth braided | DN015618 |
| - #2 Awg Stranded Blue THHN Wire | DN015627 |
| - #2 Awg Stranded Black THHN Wire | DN015630 |
| - #2 Awg Stranded Green Ground Wire | DN015633 |

**Table:** Raycap Power Booster Cable Part #'s

# 11. SITE FINALIZATION

### 11.1. Green Light Test (GLT)

**11.1.1.** The GC is to notify the Construction Manager (CM) during weekly meetings regarding which sites are ready for GLT.

**11.1.2.** The CM will make a note in Nexsys-One (N1) under 'CM Comments' using the following format (initials/date/ready for GLT).

**11.1.3.** The CM will coordinate with the Operations Manager to schedule the GLT.

**11.1.4.** The Close Out Package (COP) pictures shown must be uploaded into N1 and verified by the GC before requesting the Green Light Test.

**11.1.5.** The CM will approve the COP pictures before coordinating the test.

**11.1.6.** A portable generator should be used to perform the test. **DO NOT USE THE BATTERY BACK UP TO PERFORM THIS TASK.**




**This document is confidential and privileged to DISH. It is intended solely for use by DISH internal employees and DISH's approved vendors. Any other access or review of this document is prohibited. Any disclosure, copying or distribution, other than to DISH employees, is prohibited without DISH's consent in each instance. Hard copies of this document are not controlled and may not be current. Verify that the hard copy of this document is the most current by matching the revision and revision date to the master located in document storage.**

**Example:** CSR Optical Ports

## 11.2. Ready to Green Light means the following

**11.2.1.** The Hybrid Power and Fibers are correctly terminated and labeled.

**11.2.2.** The Hybrid Power is color-coded at both the tower and ground OVP.

**11.2.3.** The Hybrid Fibers are color-coded at the tower OVP and Cell Site Router (CSR).

**11.2.4.** The OVP breakers are labeled at the ground OVP.

**11.2.5.** All antennas and radios are mounted with RF and RET cables installed and color-coded correctly.

**11.2.6.** The GPS is installed and wired up to the CSR.

## 11.3. COP Deliverables Uploaded to N1 Prior to GLT Request

**11.3.1.** RRH #1 S/N Asset Capture (Alpha)

**11.3.2.** RRH #2 S/N Asset Capture (Alpha)

**11.3.3.** RRH #1 S/N Asset Capture (Beta)

**11.3.4.** RRH #2 S/N Asset Capture (Beta)

**11.3.5.** RRH #1 S/N Asset Capture (Gamma)

**11.3.6.** RRH #2 S/N Asset Capture (Gamma)

**11.3.7.** Antenna S/N Asset Capture (Alpha) - Serial number labeled with RAD center, mechanical tilt and azimuth.

**11.3.8.** Antenna S/N Asset Capture (Beta) - Serial number labeled with RAD center, mechanical tilt and azimuth.

**11.3.9.** Antenna S/N Asset Capture (Gamma) - Serial number labeled with RAD center, mechanical tilt and azimuth.

**11.3.10.** OVP Installation (Tower)




**This document is confidential and privileged to DISH. It is intended solely for use by DISH internal employees and DISH's approved vendors. Any other access or review of this document is prohibited. Any disclosure, copying or distribution, other than to DISH employees, is prohibited without DISH's consent in each instance. Hard copies of this document are not controlled and may not be current. Verify that the hard copy of this document is the most current by matching the revision and revision date to the master located in document storage.**

11.3.10.1. Photos showing the OVP mounting and interior.

11.3.10.2. Images to show power, fiber and grounding terminations with labels.

**11.3.11.** OVP (Ground)

11.3.11.1. Photo(s) showing hybrid power circuits terminated at the ground OVP.

11.3.11.2. Image to show drain wire termination at OVP.

11.3.11.3. Antenna Azimuth (Alpha )- Verify Antenna Alignment Tool is properly attached to the antenna per OEM requirements; verify azimuth is oriented within +/-3 degrees of RFDS requirement.

11.3.11.4. Antenna Azimuth (Beta) - Verify Antenna Alignment Tool is properly attached to the antenna per OEM requirements; verify azimuth is oriented within +/-3 degrees of RFDS requirement.

11.3.11.5. Antenna Azimuth (Gamma) - Verify Antenna Alignment Tool is properly attached to the antenna per OEM requirements; verify azimuth is oriented within +/-3 degrees of RFDS requirement.

11.3.11.6. Antenna Port Termination (Alpha) - Image capture of antenna RF/RET plumbing connections and port mapping, weather proofed terminations with assigned color-code labeling per RFDS.

11.3.11.7. Antenna Port Termination (Beta) - Image capture of antenna RF/RET plumbing connections and port mapping, weather proofed terminations with assigned color-code labeling per RFDS.

11.3.11.8. Antenna Port Termination (Gamma) - Image capture of antenna RF/RET plumbing connections and port mapping, weather proofed terminations with assigned color-code labeling per RFDS.

11.3.11.9. RRU #1 Port Termination (Alpha) - Image capture of RRU RF/Fiber/Power/RET plumbing connections and port mapping, weather proofed terminations with assigned color-code labeling per RFDS.

11.3.11.10. RRU #1 Port Termination (Beta) - Image capture of RRU RF/Fiber/Power/RET plumbing connections and port mapping, weather proofed terminations with assigned color-code labeling per RFDS.

11.3.11.11. RRU #1 Port Termination (Gamma) - Image capture of RRU RF/Fiber/Power/RET plumbing connections and port mapping, weather proofed terminations with assigned color-code labeling per RFDS.

11.3.11.12. RRU #2 Port Termination (Alpha) - Image capture of RRU RF/Fiber/Power/RET plumbing connections and port mapping, weather proofed terminations with assigned color-code labeling per RFDS.



**This document is confidential and privileged to DISH. It is intended solely for use by DISH internal employees and DISH's approved vendors. Any other access or review of this document is prohibited. Any disclosure, copying or distribution, other than to DISH employees, is prohibited without DISH's consent in each instance. Hard copies of this document are not controlled and may not be current. Verify that the hard copy of this document is the most current by matching the revision and revision date to the master located in document storage.**

11.3.11.13. RRU #2 Port Termination (Beta) - Image capture of RRU RF/Fiber/Power/RET plumbing connections and port mapping, weather proofed terminations with assigned color-code labeling per RFDS.

11.3.11.14. RRU #2 Port Termination (Gamma) - Image capture of RRU RF/Fiber/Power/RET plumbing connections and port mapping, weather proofed terminations with assigned color-code labeling per RFDS.

11.3.11.15. RF Sweep Test (Return Loss System for each jumper) - PDF file to be uploaded.

11.3.11.16. Fiber (Power Test Results) - PDF file to be uploaded.

11.3.11.17. Fiber (Scoping Images) - PDF file to be uploaded.

11.3.11.18. RET CIQ - File to be uploaded.

11.3.11.19. Azimuth Report - File to be uploaded

## 11.4. Final Stamped Construction Drawing

**11.4.1.** The Site Should be Constructed According to the Final Stamped Construction Drawing and RTC Drawings (MA120 in N1).

**Note:** Any deviations require DISH CM approval.



**This document is confidential and privileged to DISH. It is intended solely for use by DISH internal employees and DISH's approved vendors. Any other access or review of this document is prohibited. Any disclosure, copying or distribution, other than to DISH employees, is prohibited without DISH's consent in each instance. Hard copies of this document are not controlled and may not be current. Verify that the hard copy of this document is the most current by matching the revision and revision date to the master located in document storage.**

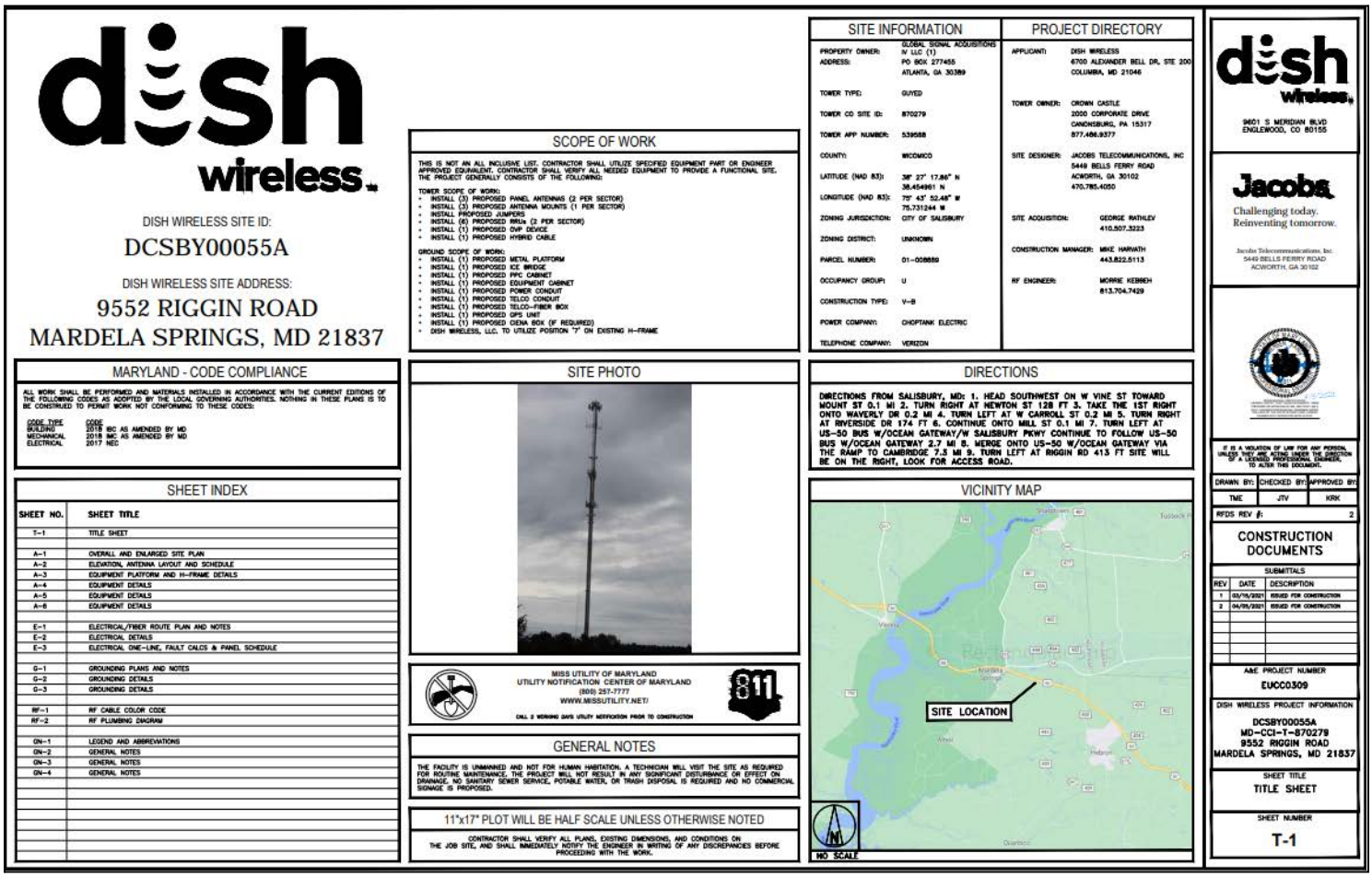


**Example:** DISH Construction Drawing Front Sheet

# END OF DOCUMENT




**This document is confidential and privileged to DISH. It is intended solely for use by DISH internal employees and DISH's approved vendors. Any other access or review of this document is prohibited. Any disclosure, copying or distribution, other than to DISH employees, is prohibited without DISH's consent in each instance. Hard copies of this document are not controlled and may not be current. Verify that the hard copy of this document is the most current by matching the revision and revision date to the master located in document storage.**